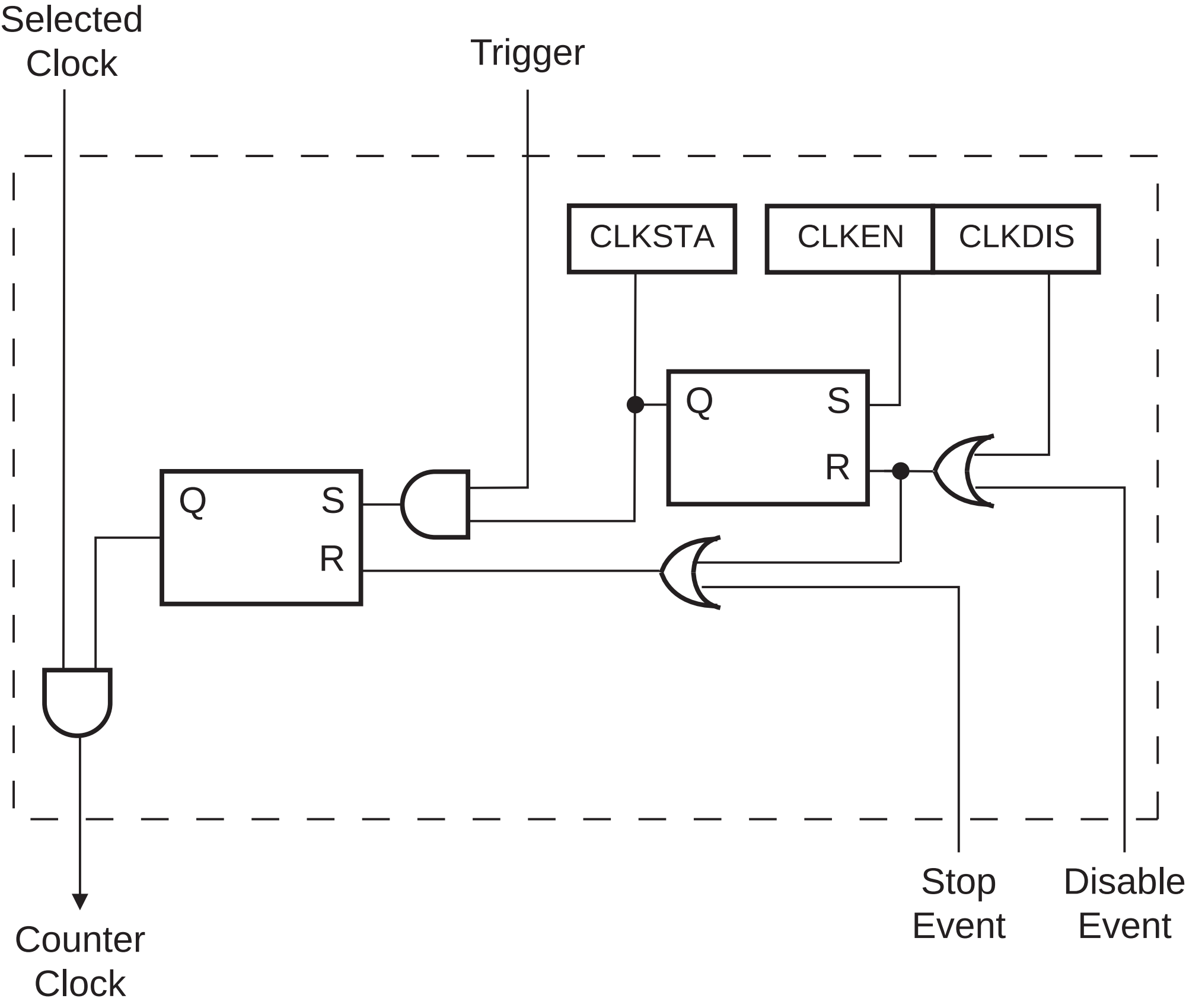
Selected Clock
Trigger
CLKSTA
CLKEN
CLKDIS
Q
S
R
Q
S
R
Counter Clock
Stop Event
Disable Event