USB-Type-A

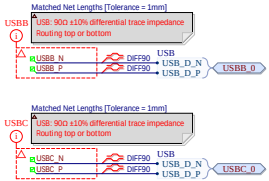

USB-B port CONN TYPE A

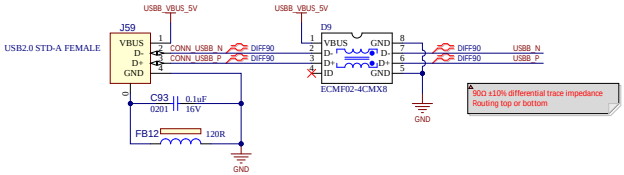

USB-C port CONN TYPE A

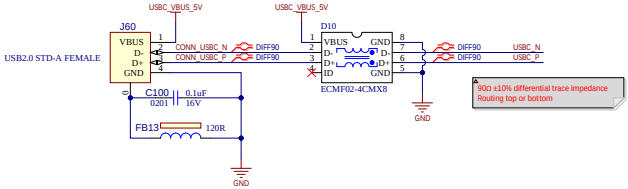

USB-B / USB-C Host Power Switch

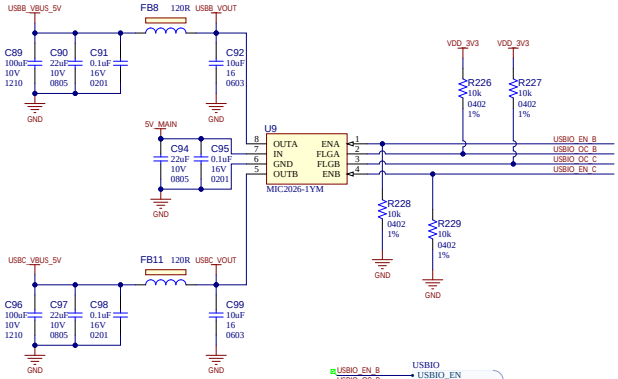

Project Owner: SMS			
PCB Layout Contact: SMS			
PartNumber: 02-01341	Project Title: *SAMA7D65 Curiosity Pro*	Variant: Standard	
Sheet Title: USB-Type-A			
Size: B	SCH #: 02-01341	Rev: 1	Date: 13 May 2026
	PCB #: 04-12402	Rev: 1	Sheet 38 of 38
File: USB-Type-A.SchDoc			

MICROCHIP

Designed with Altium

Altium.com