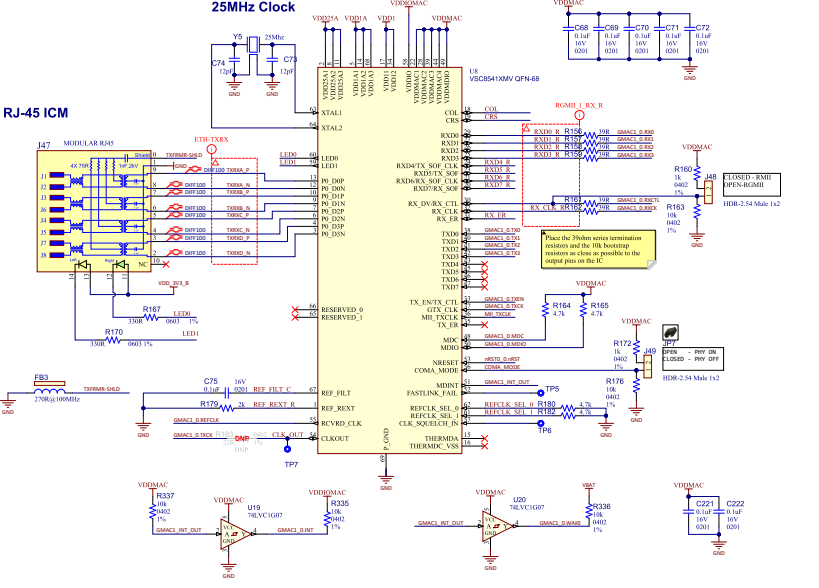

LINK ADVERTISING

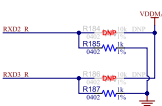

RXD2_R, RXD3_R	LINK ADVERTISMENT
0,0	10/100/100 FDX/HDX, autoneg ON*
0,1	10/100 FDX/HDX, autoneg ON
1,0	100BTX, HDX Forced, autoneg OFF
1,1	10BT, HDX Forced, autoneg OFF

BOOT STRAPPING

CLK_OUT	CLK_OUT enable/disable
0	Disabled*
1	Enabled
COL	MASTER/SLAVE MODE
0	Disabled*
1	Enabled
CRS	MDI/MDIX MODE
0	Disabled
1	Enabled*
RX_CLK_R	DEVICE OPERATION
0	Managed
1	Unmanaged*
RX_ER	FORCED 1000BASE-T MODE
0	Disabled*
1	Enabled
MIL_TXCLK	INTERFACE MODE
0	RGMII/RMII*
1	GMII/MII (Not Used)

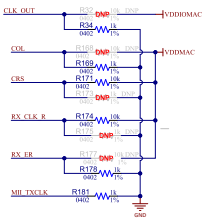

RGMII CLOCK DELAY

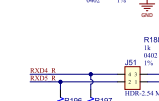

RXD0_R, RXD1_R	RX_CLK & TX_CLK DELAY SETTING
0,0	000 - 0.2 ns
0,1	101 - 1.1 ns
1,0	100 - 2.0 ns*
1,1	110 - 2.6 ns

PHY ADDRESSING

NOTE: PHYAD[3:0] = 0x1 and x=PHYID

RXD4_R, RXD5_R	PHY ADDRESS
0,0	PHYAD0
0,1	PHYAD1*
1,0	PHYAD2
1,1	PHYAD3

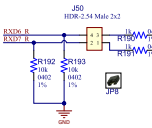

CLKOUT FREQUENCY

CLK Frequency Selection	CLKOUT Frequency
00	25Mhz
01	50MHz*
10	125MHz
11	Reserved

*CLKOUT must be configured to be 50MHz for RMII Mode