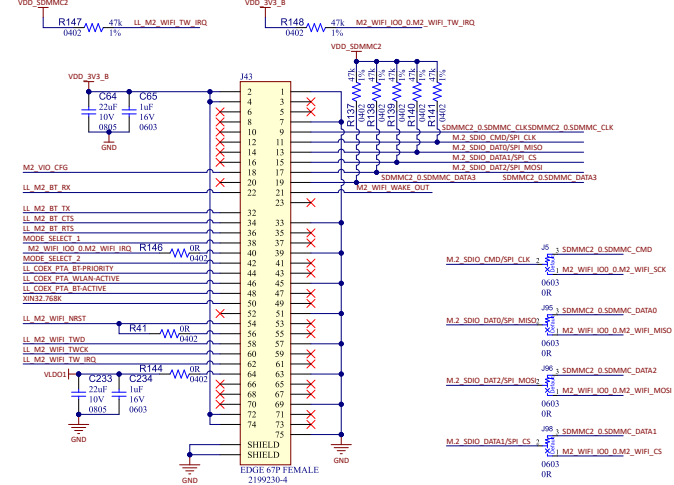

M.2 socket

SPI signals selectors

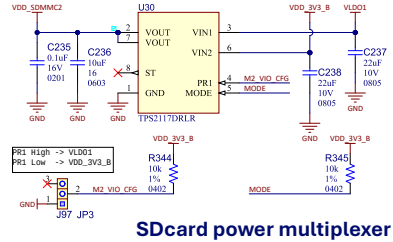

SDcard power multiplexer

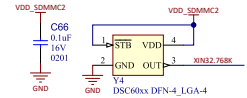

32kHz local oscillator

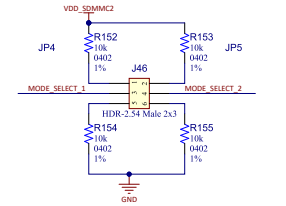

MODE_SELECT_1	MODE_SELECT_2	HOST INTERFACE
VDD_3V3	VDD_3V3	SPI/SDIO
GND	GND	UART
GND	VDD_3V3	I2C
VDD_3V3	GND	USB

Mode selection

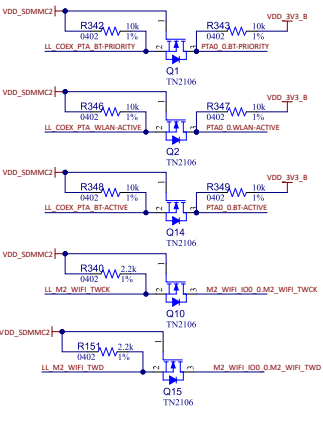

Misc. level shifters

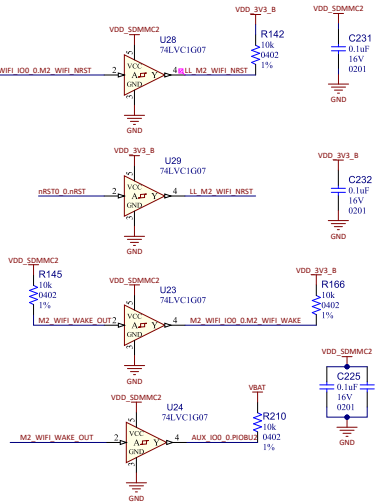

Open drain buffers

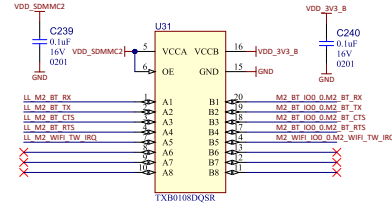

BT bus level shifter