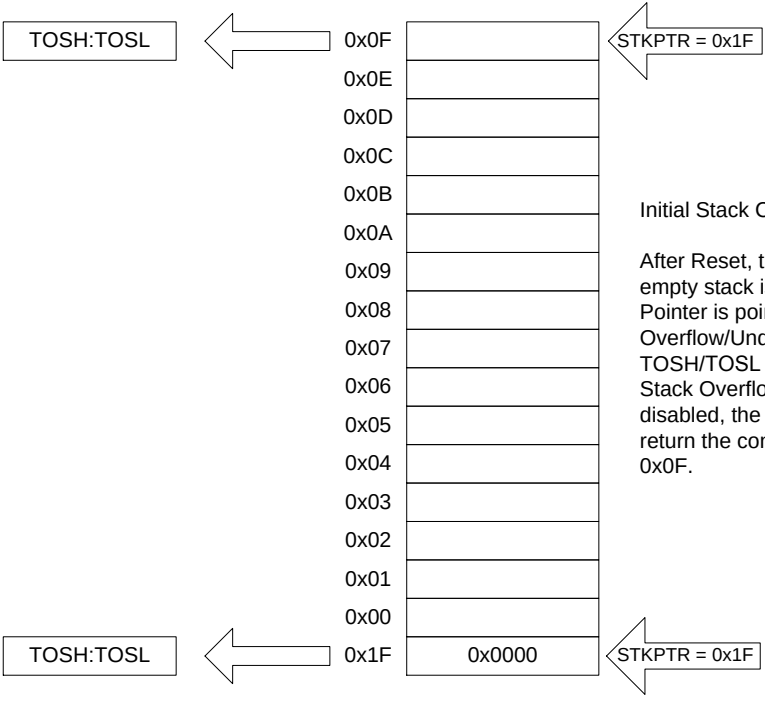


Initial Stack Configuration:

After Reset, the stack is empty. The empty stack is initialized so the Stack Pointer is pointing at 0x1F. If the Stack Overflow/Underflow Reset is enabled, the TOSH/TOSL register will return '0'. If the Stack Overflow/Underflow Reset is disabled, the TOSH/TOSL register will return the contents of stack address 0x0F.