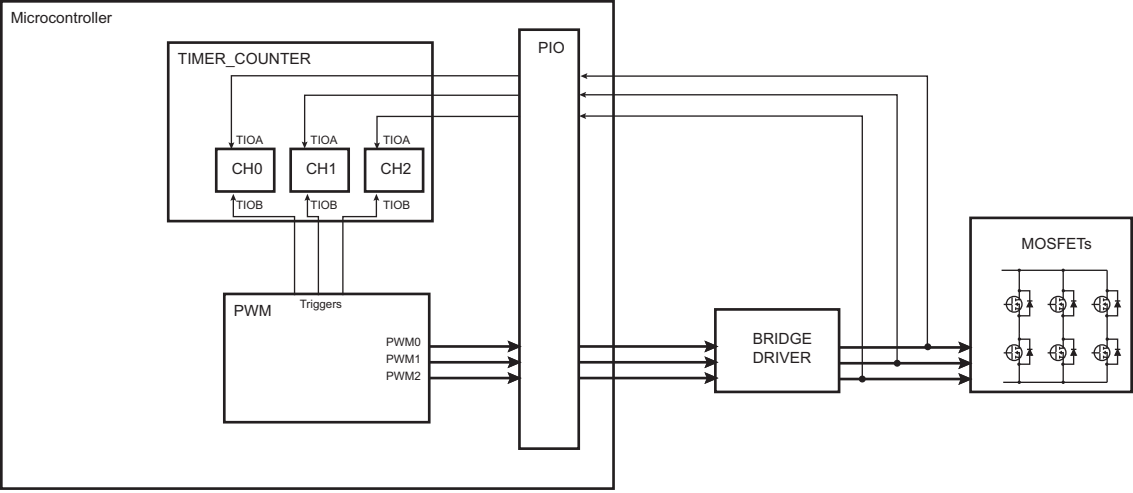
Microcontroller
TIMER_COUNTER
PIO
TIOA
TIOA
TIOA
CH0
CH1
CH2
TIOB
TIOB
TIOB
PWM
Triggers
PWM0
PWM1
PWM2
BRIDGE
DRIVER
MOSFETs

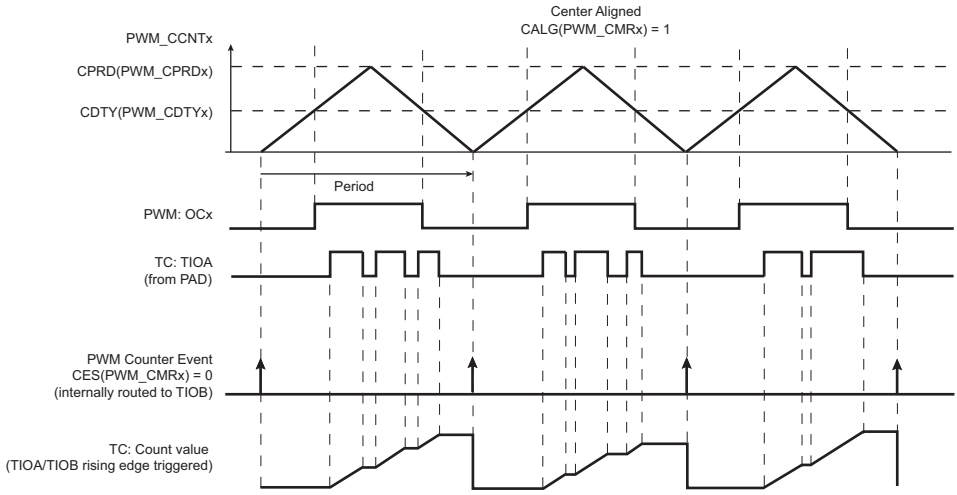
Center Aligned
CALG(PWM_CMRx) = 1
PWM_CCNTx
CPRD(PWM_CPRDx)
CDTY(PWM_CDTYx)
Period
PWM: OCx
TC: TIOA
(from PAD)
PWM Counter Event
CES(PWM_CMRx) = 0
(internally routed to TIOB)
TC: Count value
(TIOA/TIOB rising edge triggered)

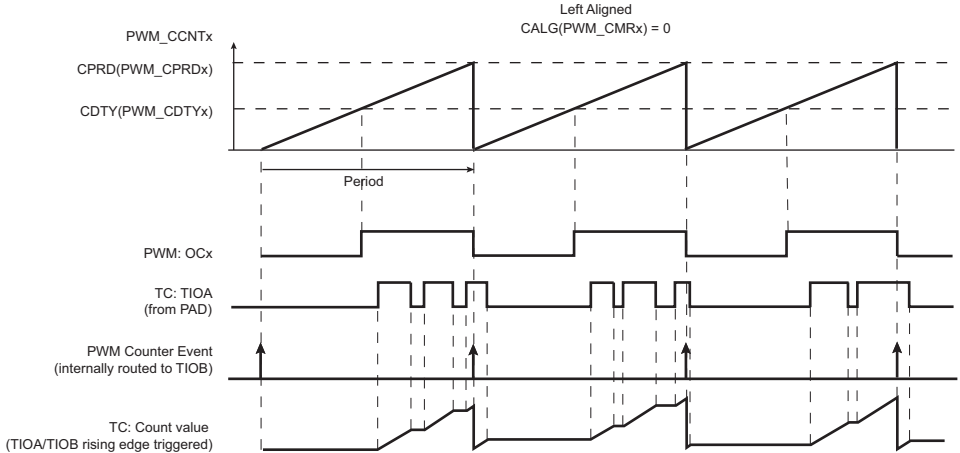
Left Aligned
CALG(PWM_CMRx) = 0
PWM_CCNTx
CPRD(PWM_CPRDx)
CDTY(PWM_CDTYx)
Period
PWM: OCx
TC: TIOA
(from PAD)
PWM Counter Event
(internally routed to TIOB)
TC: Count value
(TIOA/TIOB rising edge triggered)