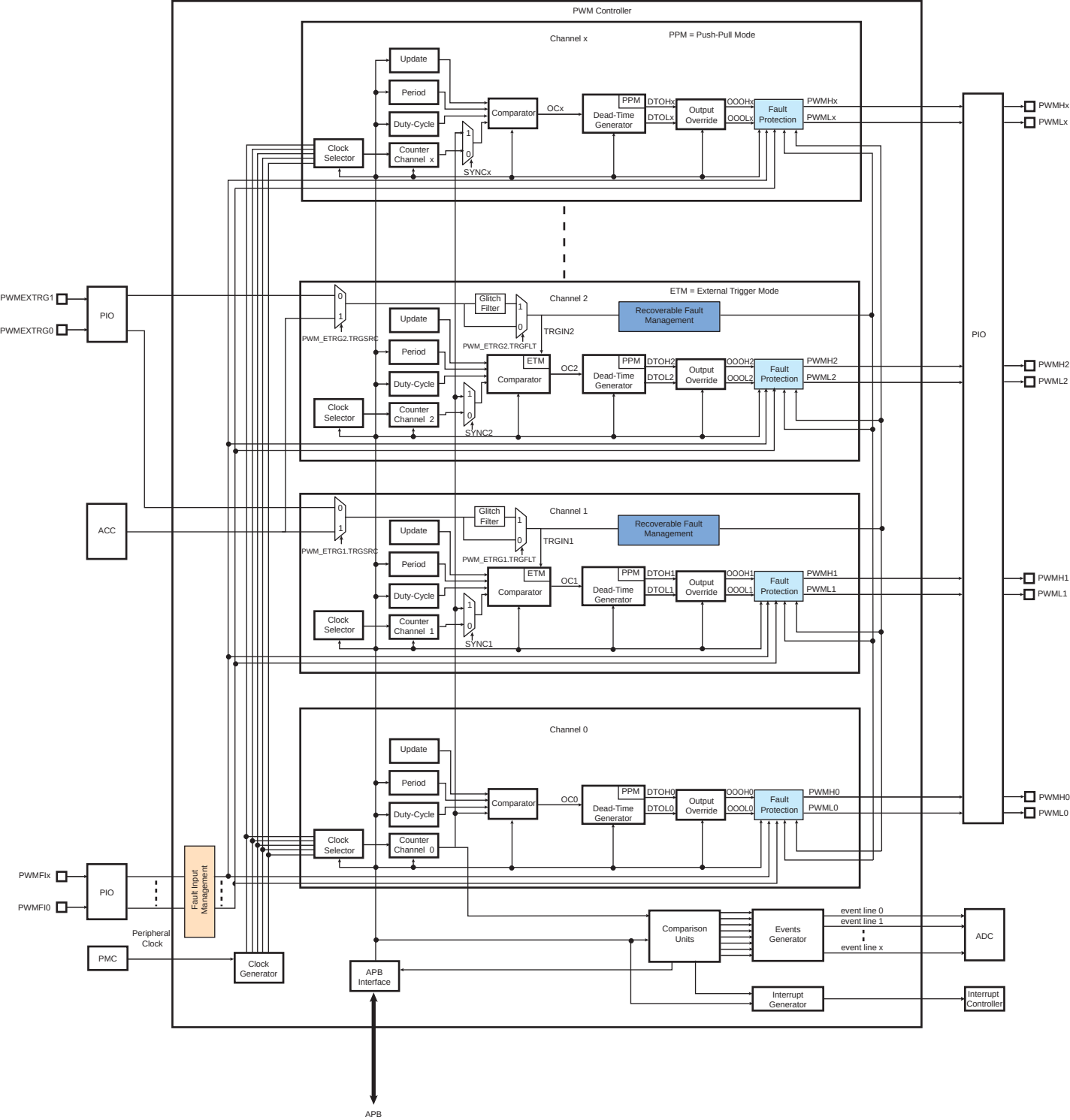
PWM Controller
Channel x
PPM = Push-Pull Mode
Update
Period
Duty-Cycle
Counter Channel x
Clock Selector
Comparator
OCx
PPM
Dead-Time Generator
DTOHx
DTOLx
Output Override
OOOHx
OOOLx
Fault Protection
PWMHx
PWMLx
SYNCx
PWMEXTRG1
PWMEXTRG0
PIO
Channel 2
ETM = External Trigger Mode
Glitch Filter
Recoverable Fault Management
TRGIN2
PWM_ETRG2.TRGSRC
PWM_ETRG2.TRGFLT
ETM
OC2
DTOH2
DTOL2
OOOH2
OOOL2
PWMH2
PWML2
Counter Channel 2
SYNC2
ACC
Channel 1
TRGIN1
PWM_ETRG1.TRGSRC
PWM_ETRG1.TRGFLT
OC1
DTOH1
DTOL1
OOOH1
OOOL1
PWMH1
PWML1
Counter Channel 1
SYNC1
Channel 0
OC0
DTOH0
DTOL0
OOOH0
OOOL0
PWMH0
PWML0
Counter Channel 0
PWMFIx
PWMFI0
Fault Input Management
Peripheral Clock
PMC
Clock Generator
APB Interface
APB
Comparison Units
Events Generator
event line 0
event line 1
event line x
ADC
Interrupt Generator
Interrupt Controller