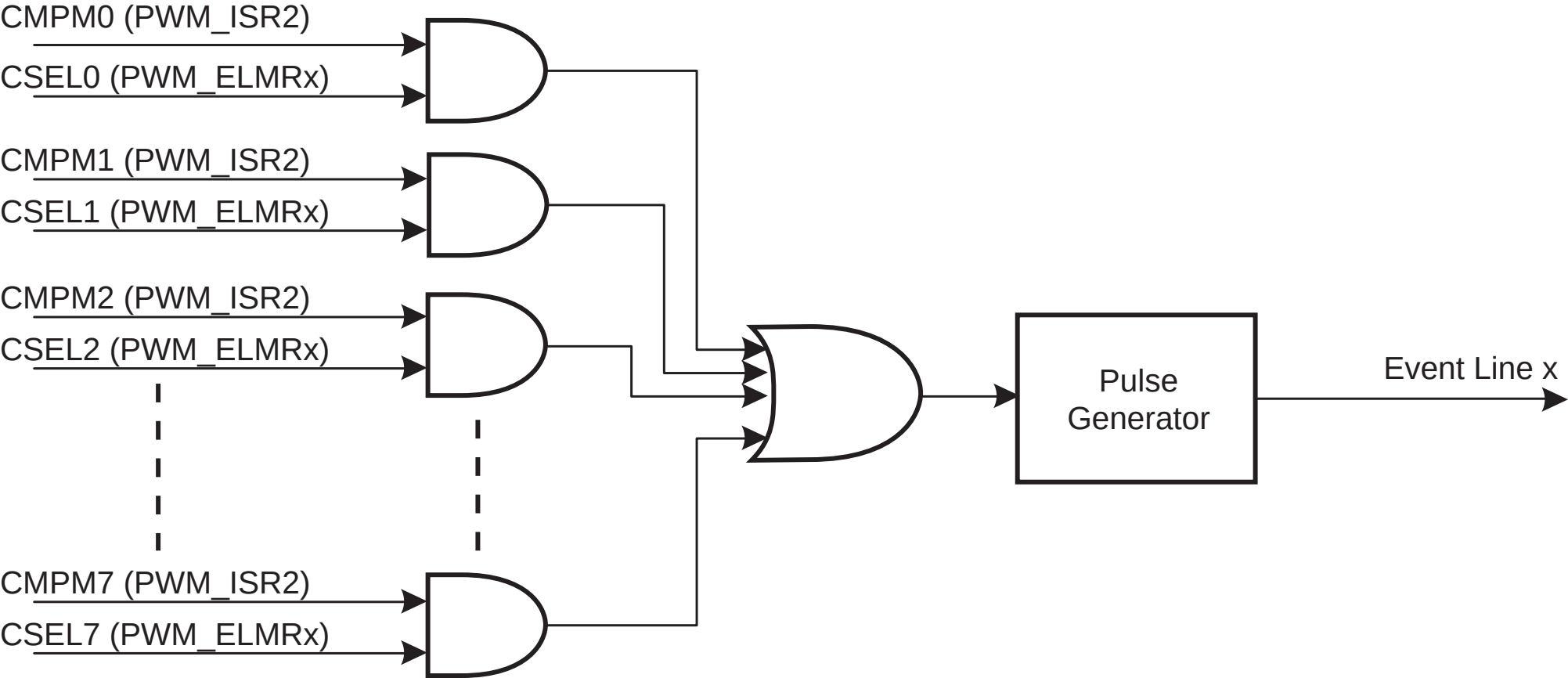
CMPM0 (PWM_ISR2)
CSEL0 (PWM_ELMRx)
CMPM1 (PWM_ISR2)
CSEL1 (PWM_ELMRx)
CMPM2 (PWM_ISR2)
CSEL2 (PWM_ELMRx)
CMPM7 (PWM_ISR2)
CSEL7 (PWM_ELMRx)
Pulse Generator
Event Line x