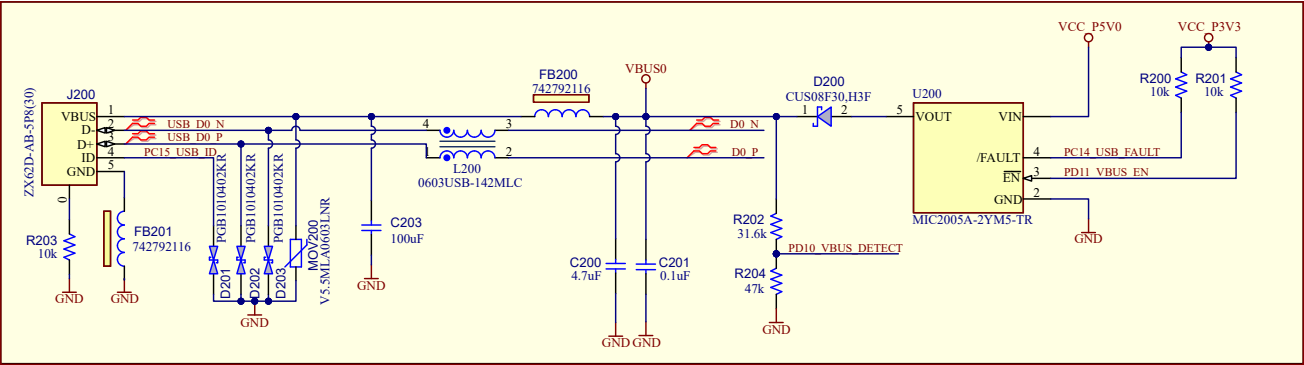USB0 - Host / Device