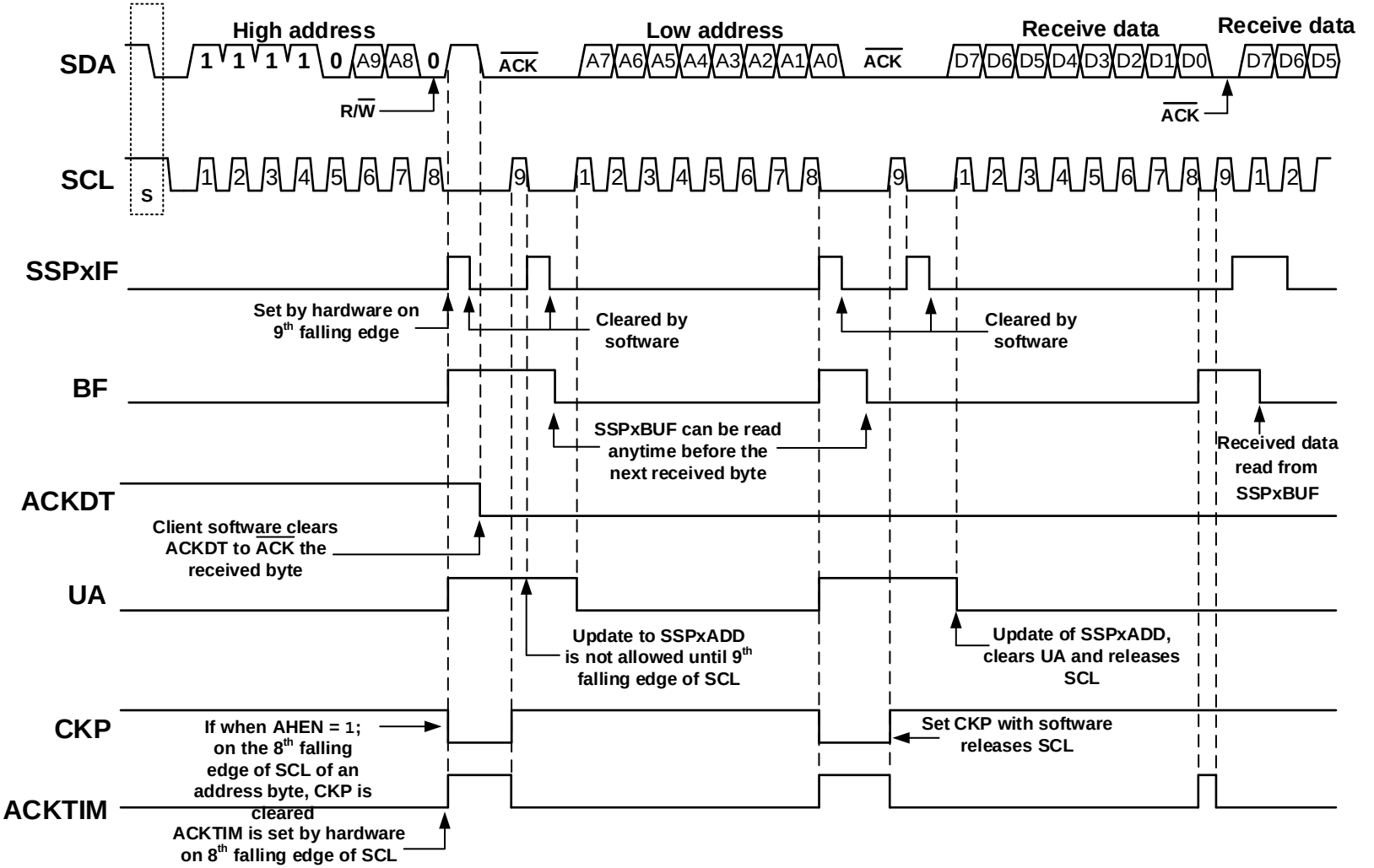
High address
Low address
Receive data
Receive data
SDA
1 1 1 1 0 A9 A8 0
ACK
A7 A6 A5 A4 A3 A2 A1 A0
ACK
D7 D6 D5 D4 D3 D2 D1 D0
D7 D6 D5
R/W
ACK
SCL
S
1 2 3 4 5 6 7 8 9 1 2 3 4 5 6 7 8 9 1 2 3 4 5 6 7 8 9 1 2
SSPxIF
Set by hardware on 9th falling edge
Cleared by software
Cleared by software
BF
SSPxBUF can be read anytime before the next received byte
Received data read from SSPxBUF
ACKDT
Client software clears ACKDT to ACK the received byte
UA
Update to SSPxADD is not allowed until 9th falling edge of SCL
Update of SSPxADD, clears UA and releases SCL
CKP
If when AHEN = 1; on the 8th falling edge of SCL of an address byte, CKP is cleared
Set CKP with software releases SCL
ACKTIM
ACKTIM is set by hardware on 8th falling edge of SCL