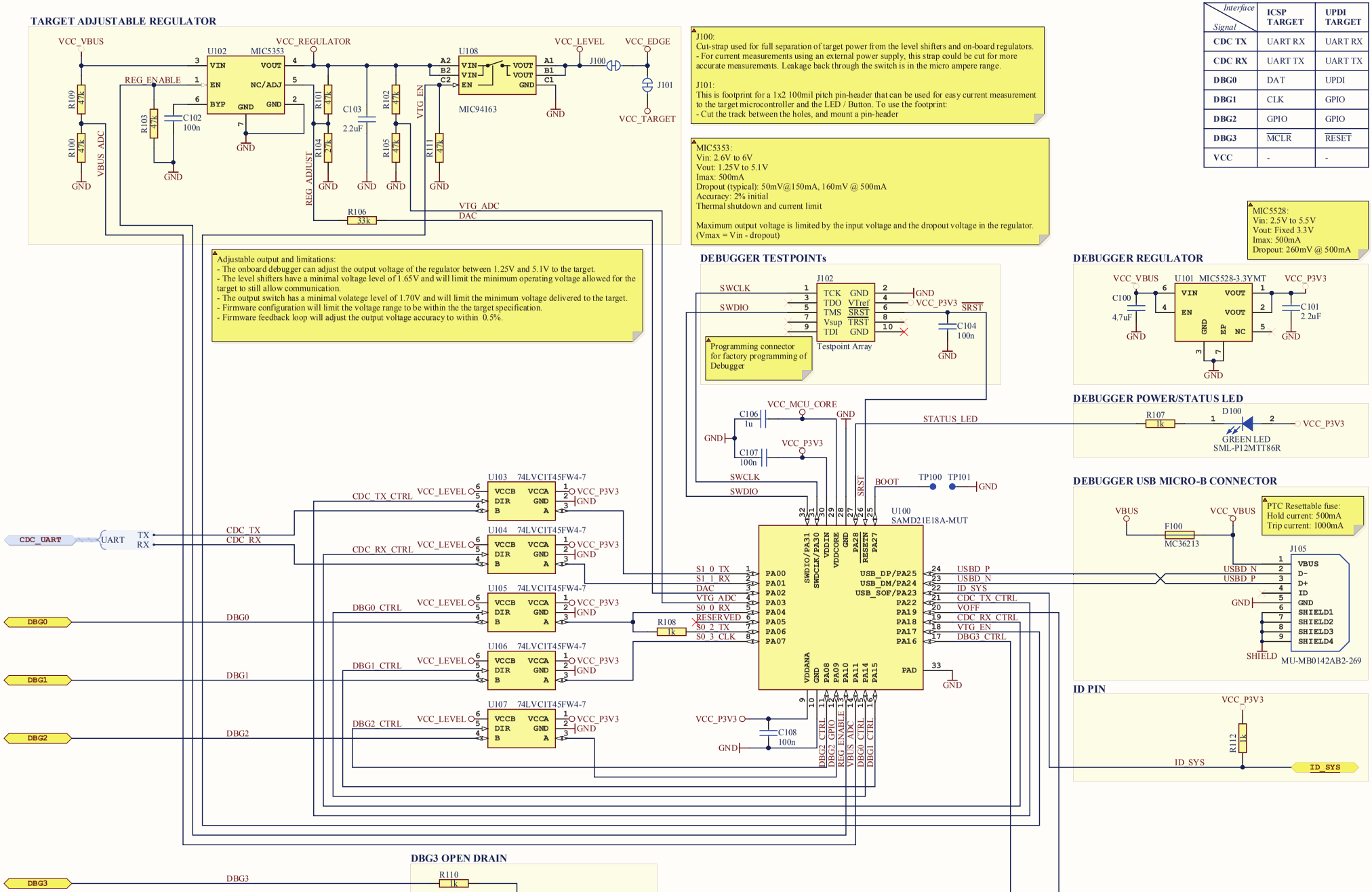

Signal \ Interface	ICSP TARGET	UPDI TARGET
CDC TX	UART RX	UART RX
CDC RX	UART TX	UART TX
DBG0	DAT	UPDI
DBG1	CLK	GPIO
DBG2	GPIO	GPIO
DBG3	$\overline{MCLR}$	$\overline{RESET}$
VCC	-	-

Drawn By: Microchip Norway		
Engineer: TF, HN		
Project Title: *PIC16F15376 Curiosity Nano*		
Sheet Title: Debugger		
Size A3	PCB Assembly Number: A09-3251	PCBA Revision: 2
	PCB Number: A08-2980	PCB Revision: 2
File: PIC16F15376_Curiosity_Nano_Debugger.SchDoc		Date: 09.05.2019
		Page: 3 of 4

Designed with Altium
Altium.com