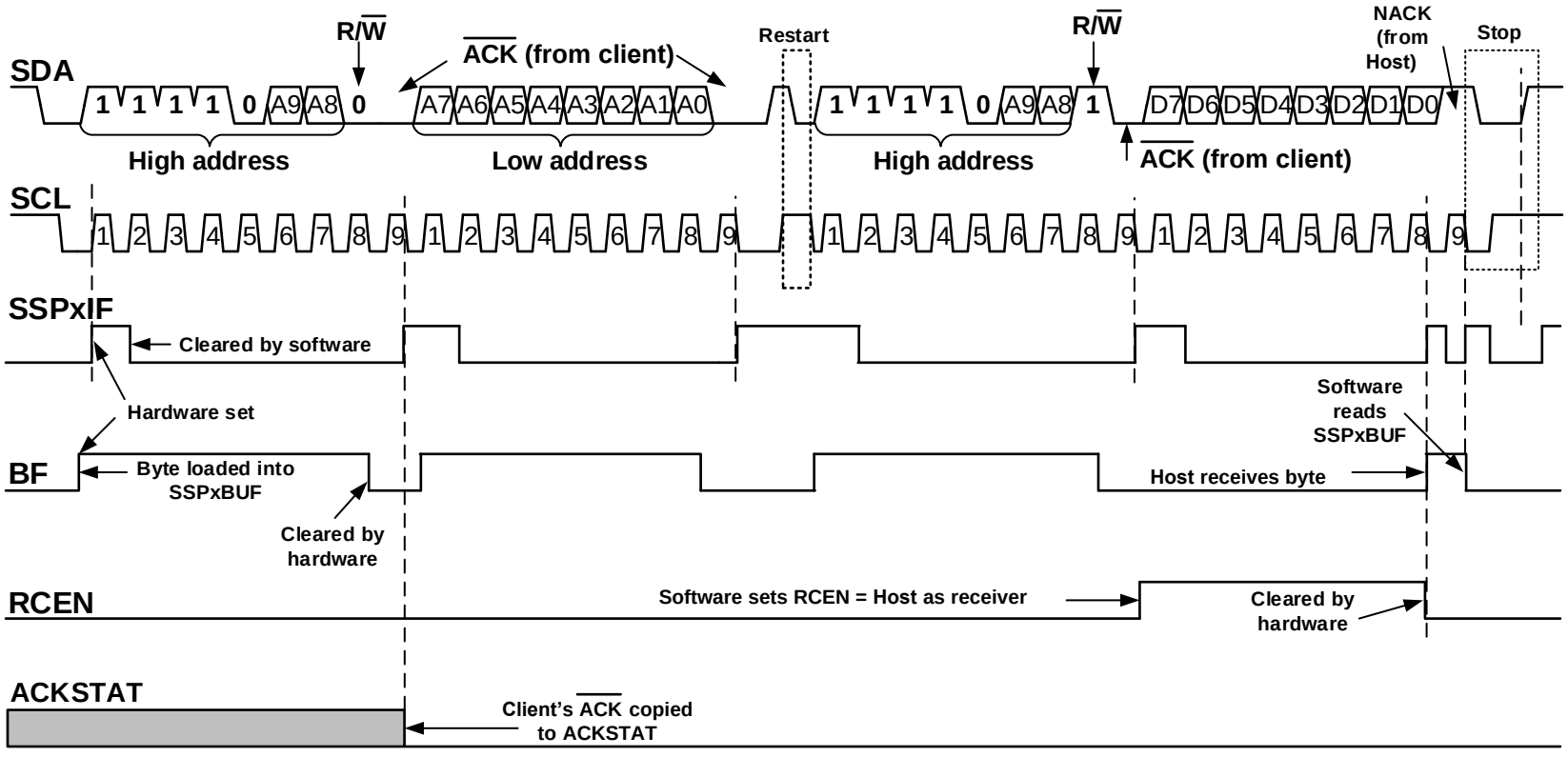
SDA
SCL
SSPxIF
BF
RCEN
ACKSTAT
R/W
ACK (from client)
Restart
R/W
NACK (from Host)
Stop
1 1 1 1 0 A9 A8 0
A7 A6 A5 A4 A3 A2 A1 A0
1 1 1 1 0 A9 A8 1
D7 D6 D5 D4 D3 D2 D1 D0
High address
Low address
High address
ACK (from client)
1 2 3 4 5 6 7 8 9
Cleared by software
Hardware set
Byte loaded into SSPxBUF
Cleared by hardware
Software reads SSPxBUF
Host receives byte
Software sets RCEN = Host as receiver
Cleared by hardware
Client's ACK copied to ACKSTAT