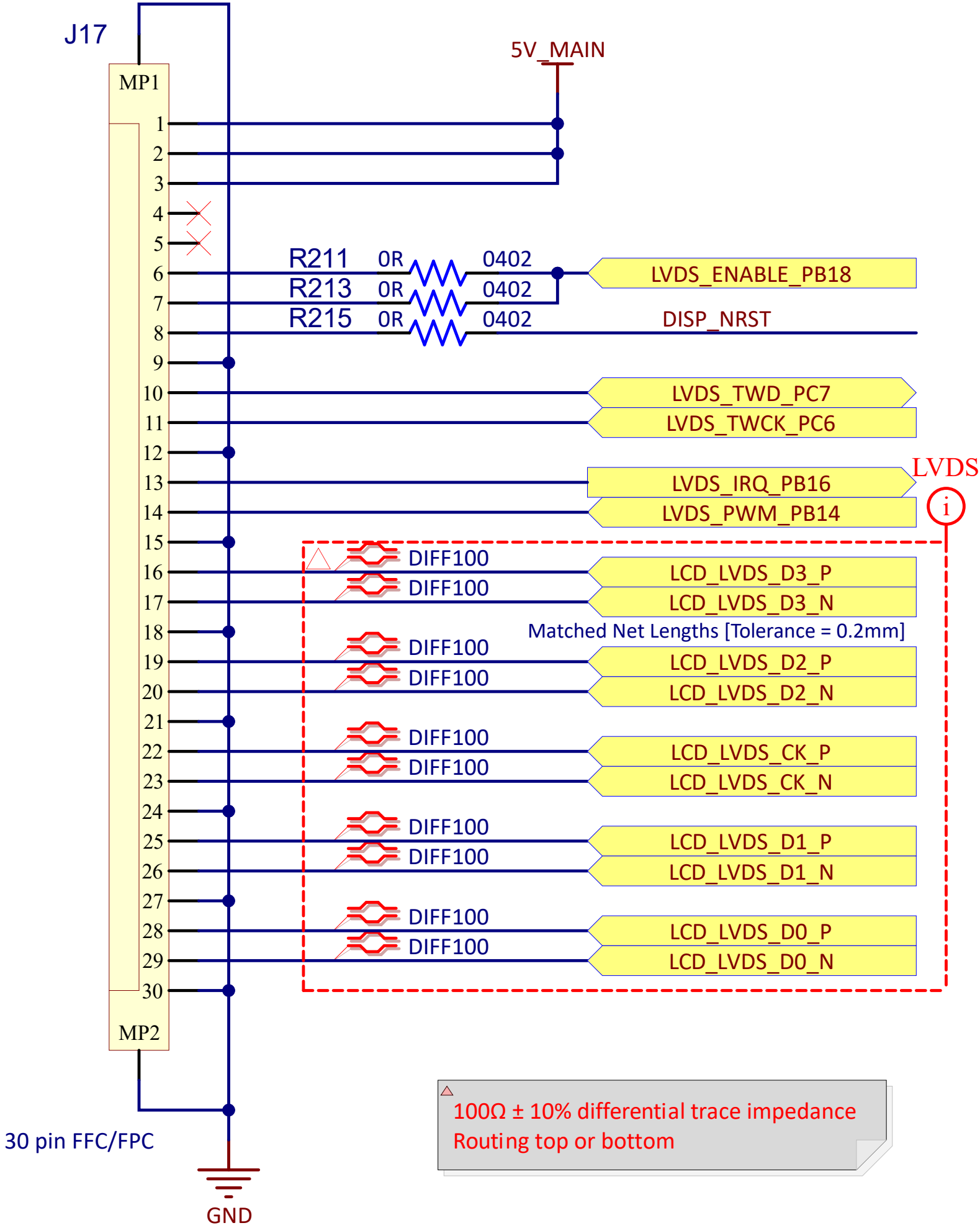
J17
MP1
MP2
5V_MAIN
R211 0R 0402
R213 0R 0402
R215 0R 0402
LVDS_ENABLE_PB18
DISP_NRST
LVDS_TWD_PC7
LVDS_TWCK_PC6
LVDS_IRQ_PB16
LVDS_PWM_PB14
LVDS
DIFF100
LCD_LVDS_D3_P
LCD_LVDS_D3_N
Matched Net Lengths [Tolerance = 0.2mm]
LCD_LVDS_D2_P
LCD_LVDS_D2_N
LCD_LVDS_CK_P
LCD_LVDS_CK_N
LCD_LVDS_D1_P
LCD_LVDS_D1_N
LCD_LVDS_D0_P
LCD_LVDS_D0_N
100Ω ± 10% differential trace impedance
Routing top or bottom
30 pin FFC/FPC
GND