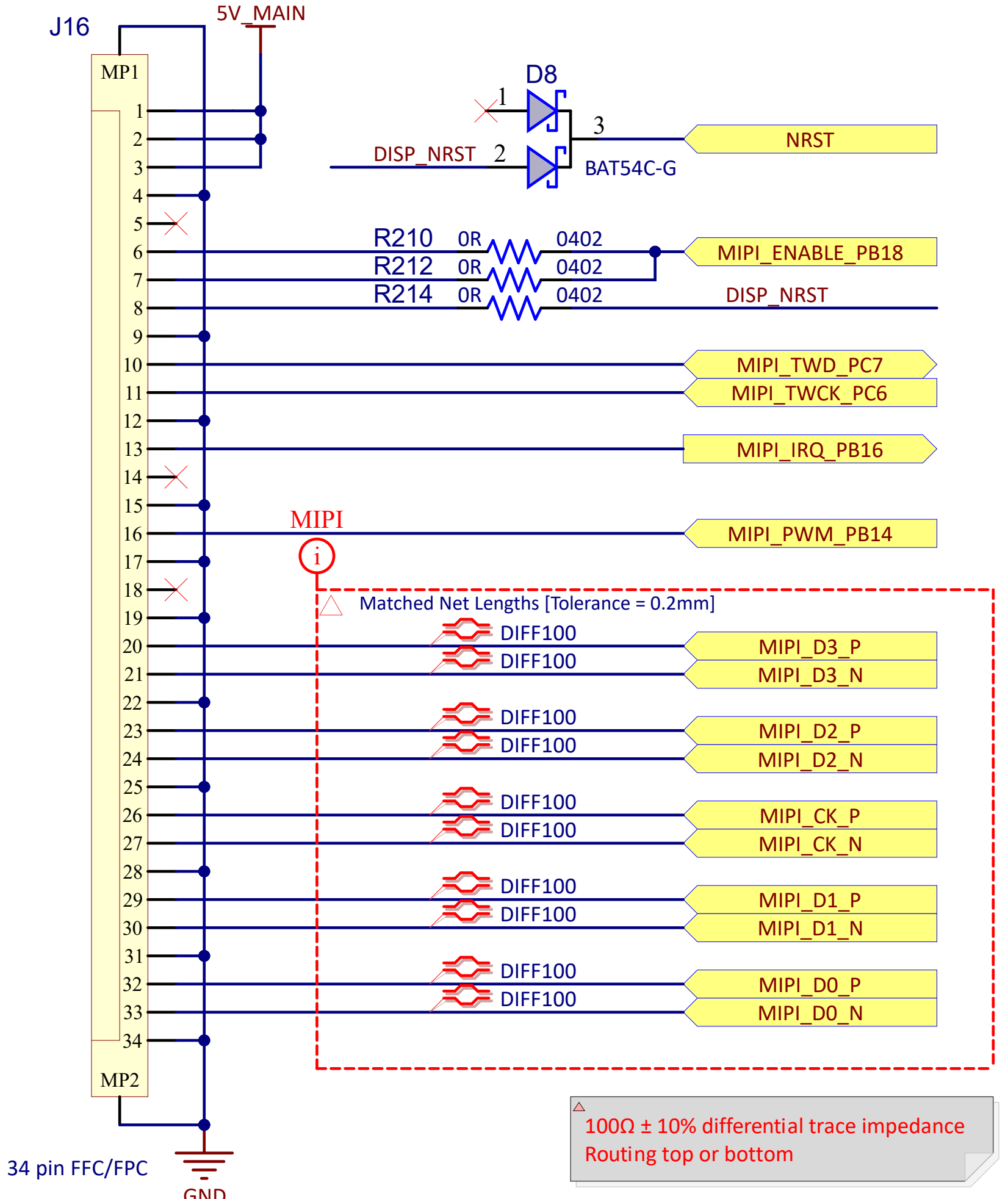
J16
5V_MAIN
MP1
MP2
D8
1
2
3
DISP_NRST
BAT54C-G
NRST
R210 0R 0402
R212 0R 0402
R214 0R 0402
MIPI_ENABLE_PB18
DISP_NRST
MIPI_TWD_PC7
MIPI_TWCK_PC6
MIPI_IRQ_PB16
MIPI
MIPI_PWM_PB14
Matched Net Lengths [Tolerance = 0.2mm]
DIFF100
MIPI_D3_P
MIPI_D3_N
MIPI_D2_P
MIPI_D2_N
MIPI_CK_P
MIPI_CK_N
MIPI_D1_P
MIPI_D1_N
MIPI_D0_P
MIPI_D0_N
34 pin FFC/FPC
GND
100Ω ± 10% differential trace impedance
Routing top or bottom