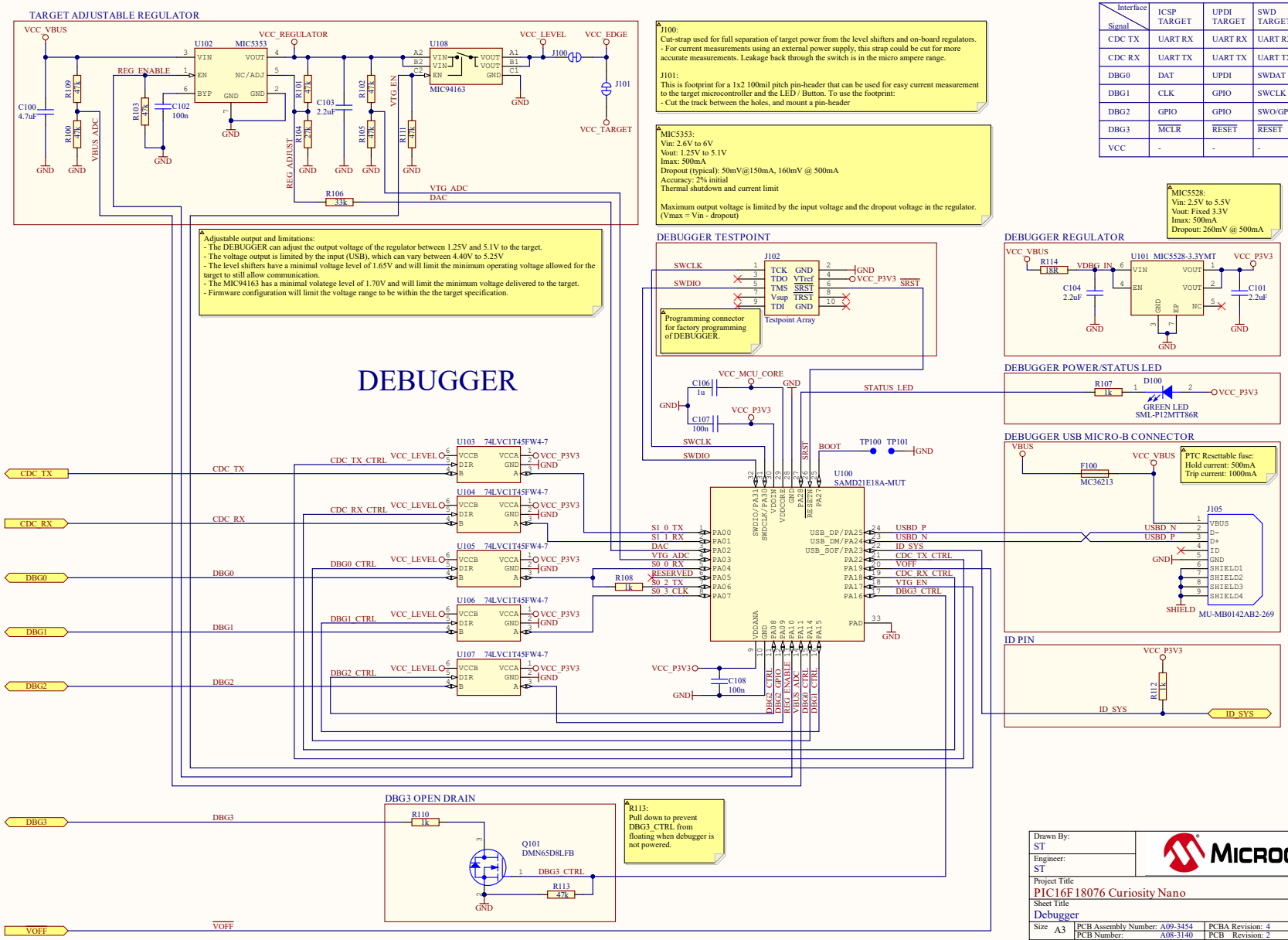

Signal \ Interface	ICSP TARGET	UPDI TARGET	SWD TARGET
CDC TX	UART RX	UART RX	UART RX
CDC RX	UART TX	UART TX	UART TX
DBG0	DAT	UPDI	SWDAT
DBG1	CLK	GPIO	SWCLK
DBG2	GPIO	GPIO	SWO/GPIO
DBG3	MCLR	RESET	RESET
VCC	-	-	-

Drawn By:	ST
Engineer:	ST
Project Title	PIC16F18076 Curiosity Nano
Sheet Title	Debugger
Size	A3
PCB Assembly Number:	A09-3454
PCB Number:	A08-3140
PCBA Revision:	4
PCB Revision:	2
Date:	2022-10-04
Page:	3 of 4
File:	PIC16F18076_Curiosity_Nano_Debugger.SchDoc

Designed with Altium
Altium.com