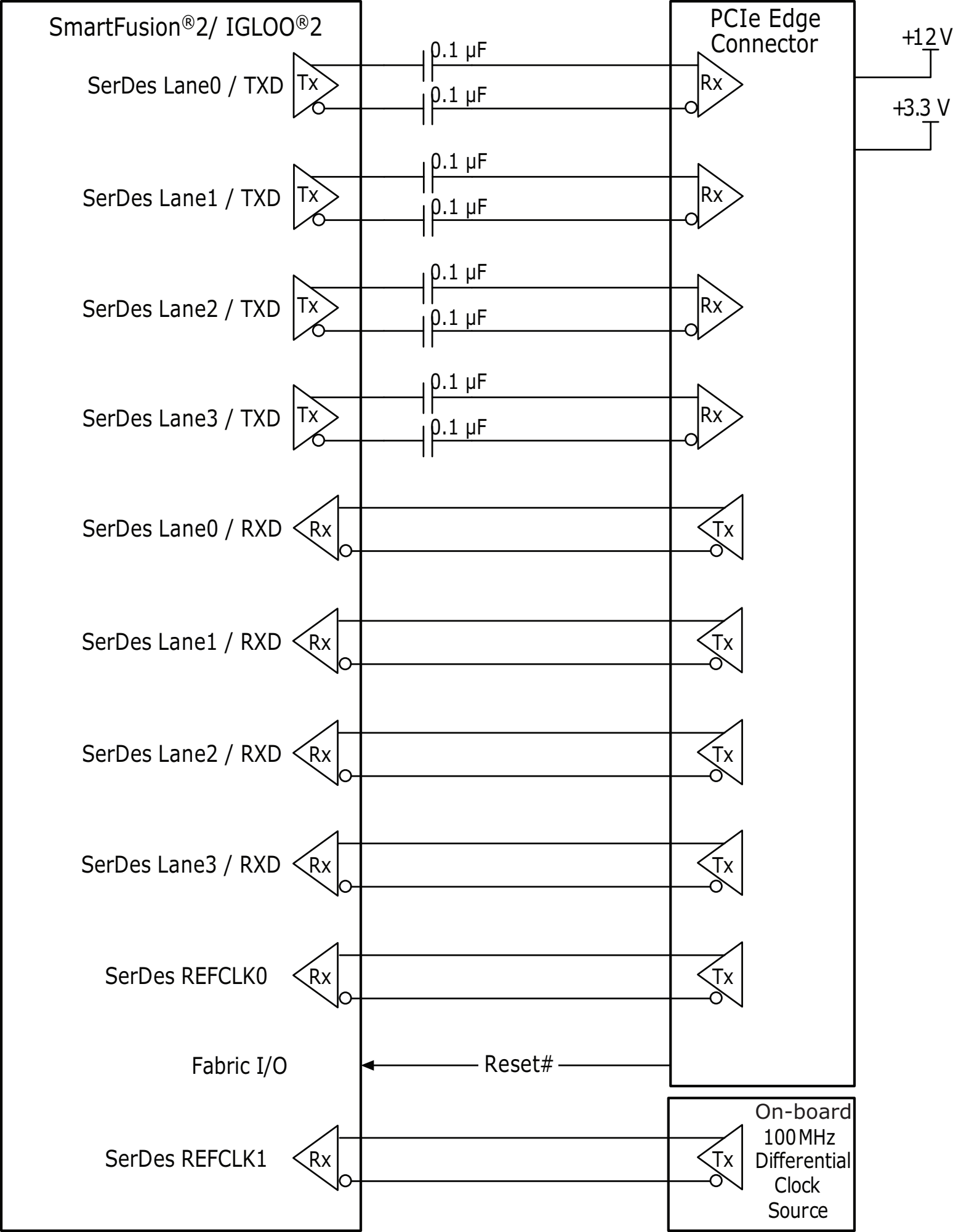
SmartFusion®2/ IGLOO®2
PCIe Edge Connector
+12 V
+3.3 V
SerDes Lane0 / TXD
SerDes Lane1 / TXD
SerDes Lane2 / TXD
SerDes Lane3 / TXD
0.1 µF
Tx
Rx
SerDes Lane0 / RXD
SerDes Lane1 / RXD
SerDes Lane2 / RXD
SerDes Lane3 / RXD
SerDes REFCLK0
Fabric I/O
Reset#
SerDes REFCLK1
On-board 100 MHz Differential Clock Source