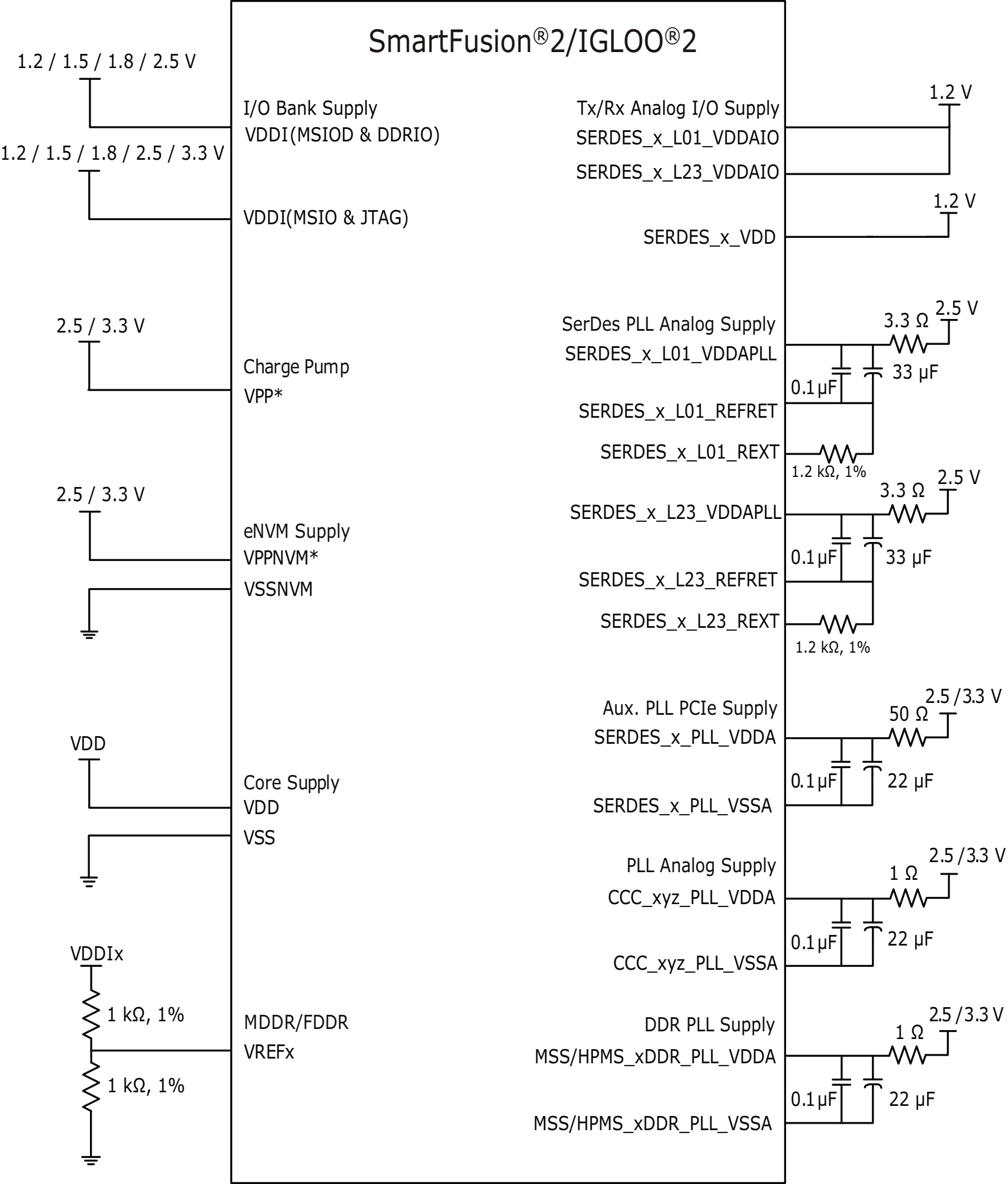
SmartFusion®2/IGLOO®2
1.2 / 1.5 / 1.8 / 2.5 V
I/O Bank Supply
VDDI(MSIOD & DDRIO)
1.2 / 1.5 / 1.8 / 2.5 / 3.3 V
VDDI(MSIO & JTAG)
2.5 / 3.3 V
Charge Pump
VPP*
2.5 / 3.3 V
eNVM Supply
VPPNVM*
VSSNVM
VDD
Core Supply
VDD
VSS
VDDIx
1 kΩ, 1%
MDDR/FDDR
VREFx
1 kΩ, 1%
Tx/Rx Analog I/O Supply
SERDES_x_L01_VDDAIO
SERDES_x_L23_VDDAIO
1.2 V
SERDES_x_VDD
1.2 V
SerDes PLL Analog Supply
SERDES_x_L01_VDDAPLL
3.3 Ω
2.5 V
0.1 µF
33 µF
SERDES_x_L01_REFRET
SERDES_x_L01_REXT
1.2 kΩ, 1%
SERDES_x_L23_VDDAPLL
3.3 Ω
2.5 V
0.1 µF
33 µF
SERDES_x_L23_REFRET
SERDES_x_L23_REXT
1.2 kΩ, 1%
Aux. PLL PCIe Supply
SERDES_x_PLL_VDDA
50 Ω
2.5 /3.3 V
0.1 µF
22 µF
SERDES_x_PLL_VSSA
PLL Analog Supply
CCC_xyz_PLL_VDDA
1 Ω
2.5 /3.3 V
0.1 µF
22 µF
CCC_xyz_PLL_VSSA
DDR PLL Supply
MSS/HPMS_xDDR_PLL_VDDA
1 Ω
2.5 /3.3 V
0.1 µF
22 µF
MSS/HPMS_xDDR_PLL_VSSA