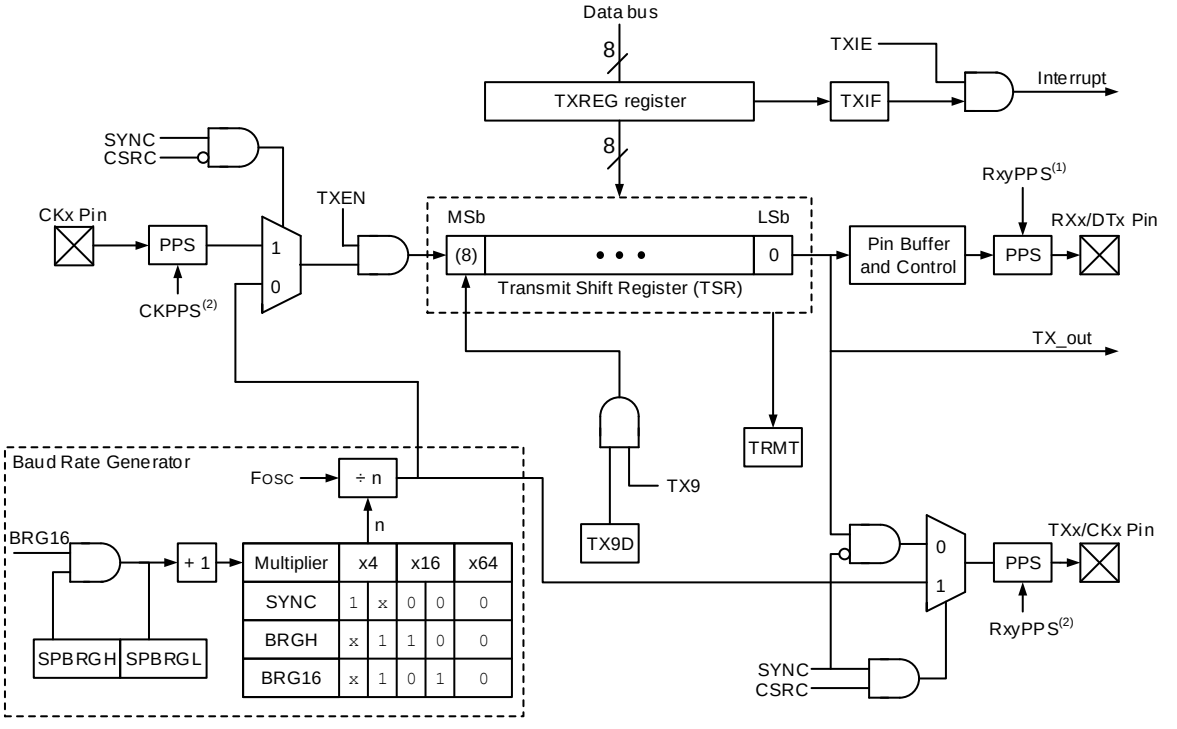

Notes: 1. In Synchronous mode, the DT output and RX input PPS selections will enable the same pin.
2. In Host Synchronous mode, the TX output and CK input PPS selections will enable the same pin.