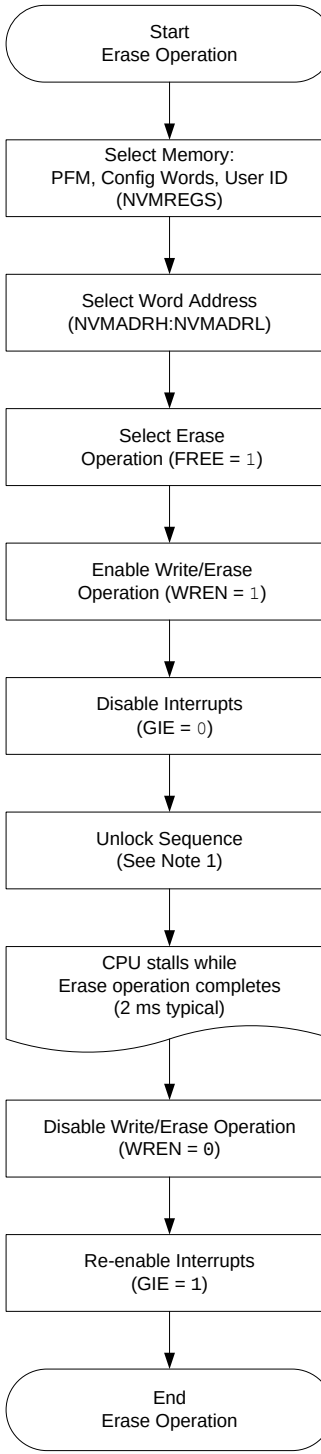
Start
Erase Operation
Select Memory:
PFM, Config Words, User ID
(NVMREGS)
Select Word Address
(NVMADRH:NVMADRL)
Select Erase
Operation (FREE = 1)
Enable Write/Erase
Operation (WREN = 1)
Disable Interrupts
(GIE = 0)
Unlock Sequence
(See Note 1)
CPU stalls while
Erase operation completes
(2 ms typical)
Disable Write/Erase Operation
(WREN = 0)
Re-enable Interrupts
(GIE = 1)
End
Erase Operation