Interface

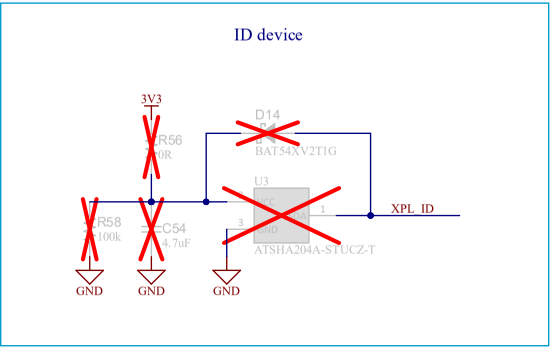
ID device
3V3
R56
0R
D14
BAT54XV2T1G
U3
VCC
GND
SDA
SCL
ATSHA204A-STUCZ-T
R58
100k
C54
4.7uF
XPL_ID
GND
GND
GND

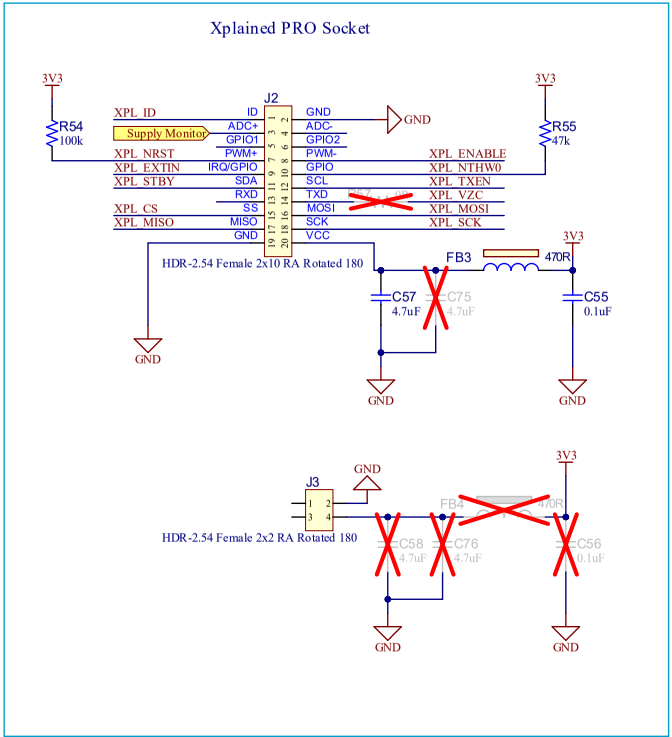
Xplained PRO Socket
3V3
R54
100k
XPL_ID
Supply Monitor
XPL_NRST
XPL_EXTIN
XPL_STBY
XPL_CS
XPL_MISO
J2
ID
ADC+
GPIO1
PWM+
IRQ/GPIO
SDA
RXD
SS
MISO
GND
GND
ADC-
GPIO2
PWM-
GPIO
SCL
TXD
MOSI
SCK
VCC
GND
3V3
R55
47k
XPL_ENABLE
XPL_NTHW0
XPL_TXEN
XPL_VZC
XPL_MOSI
XPL_SCK
HDR-2.54 Female 2x10 RA Rotated 180
FB3
470R
3V3
C57
4.7uF
C75
4.7uF
C55
0.1uF
GND
GND
GND
J3
GND
3V3
FB4
470R
HDR-2.54 Female 2x2 RA Rotated 180
C58
4.7uF
C76
4.7uF
C56
0.1uF
GND
GND

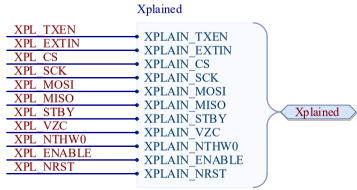
Xplained
XPL_TXEN
XPL_EXTIN
XPL_CS
XPL_SCK
XPL_MOSI
XPL_MISO
XPL_STBY
XPL_VZC
XPL_NTHW0
XPL_ENABLE
XPL_NRST
XPLAIN_TXEN
XPLAIN_EXTIN
XPLAIN_CS
XPLAIN_SCK
XPLAIN_MOSI
XPLAIN_MISO
XPLAIN_STBY
XPLAIN_VZC
XPLAIN_NTHW0
XPLAIN_ENABLE
XPLAIN_NRST
Xplained