PL460 & Main Transmission Branch
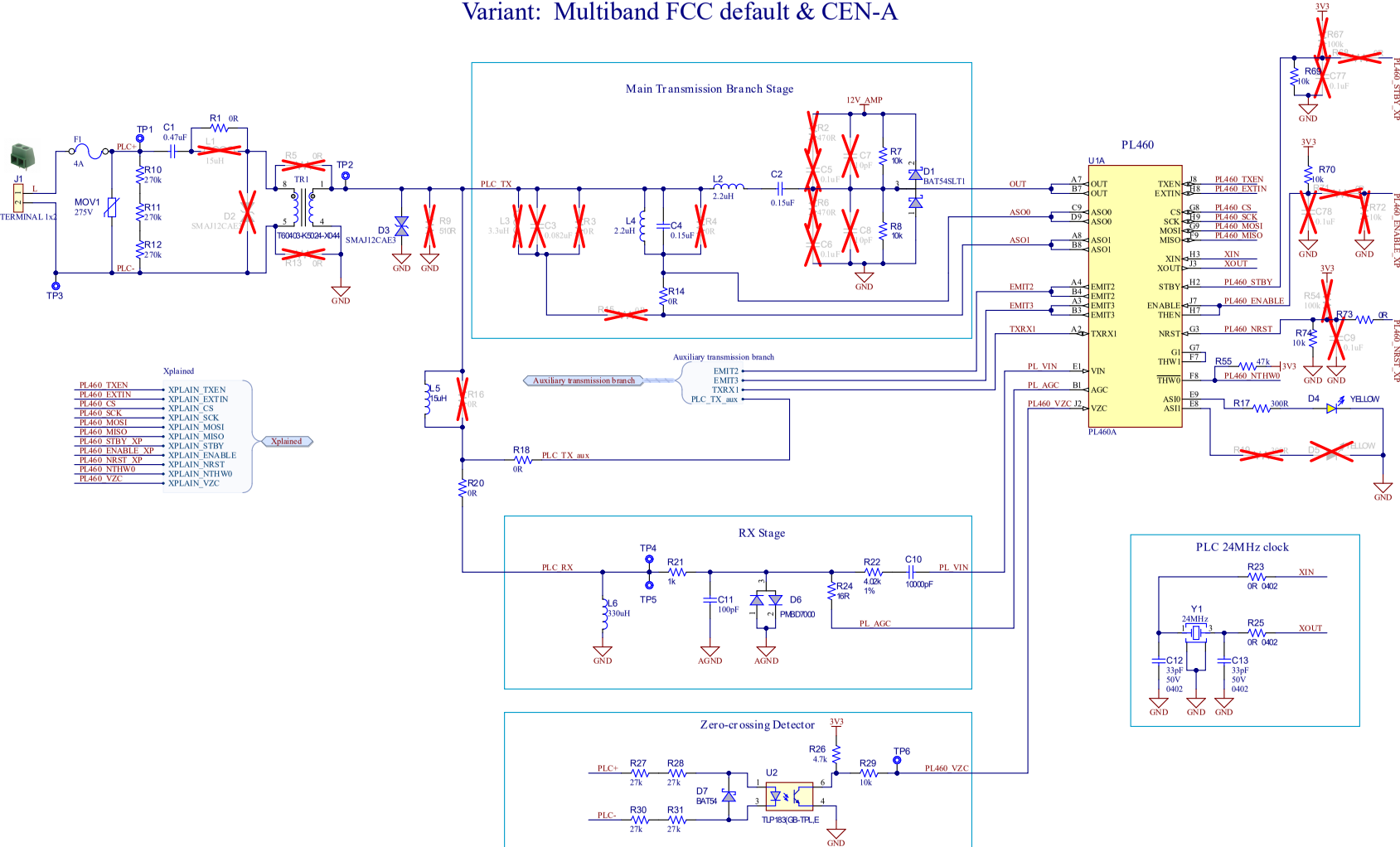
Variant: Multiband FCC default & CEN-A