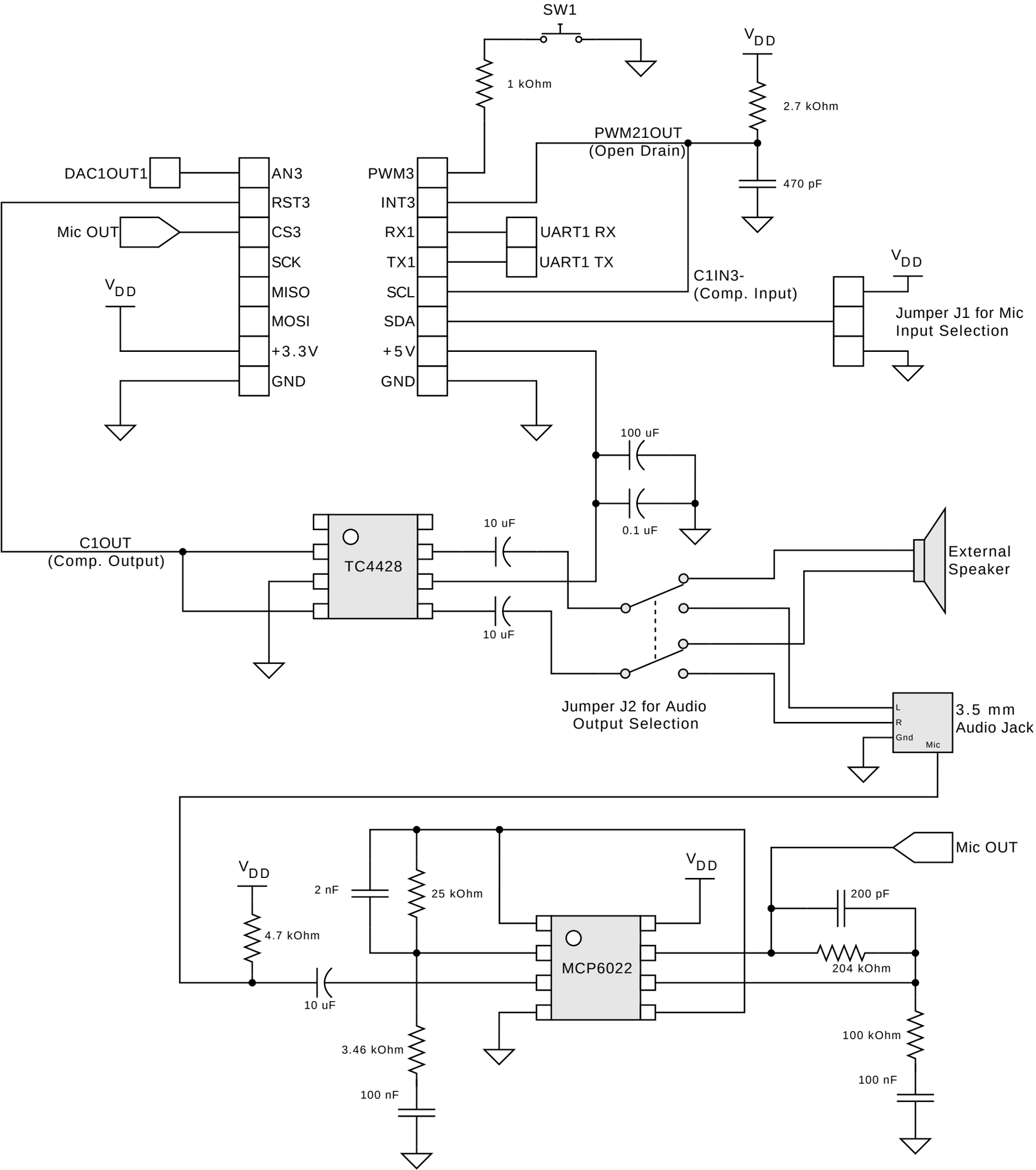
SW1
1 kOhm
VDD
2.7 kOhm
PWM21OUT
(Open Drain)
470 pF
DAC1OUT1
AN3
RST3
Mic OUT
CS3
SCK
MISO
MOSI
+3.3V
GND
VDD
PWM3
INT3
RX1
TX1
SCL
SDA
+5V
GND
UART1 RX
UART1 TX
C1IN3-
(Comp. Input)
VDD
Jumper J1 for Mic
Input Selection
100 uF
0.1 uF
10 uF
C1OUT
(Comp. Output)
TC4428
10 uF
External
Speaker
Jumper J2 for Audio
Output Selection
L
R
Gnd
Mic
3.5 mm
Audio Jack
Mic OUT
VDD
2 nF
25 kOhm
VDD
200 pF
4.7 kOhm
MCP6022
204 kOhm
10 uF
3.46 kOhm
100 kOhm
100 nF
100 nF