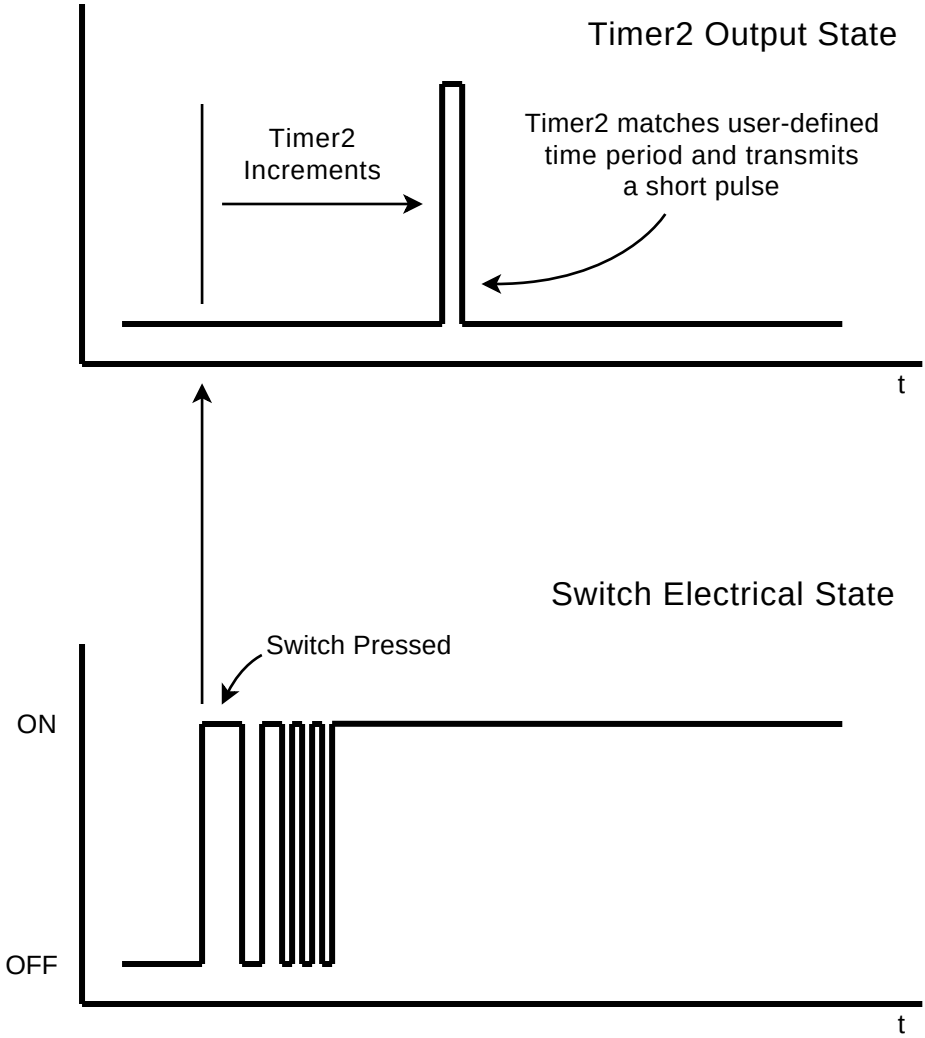
Timer2 Output State
Timer2
Increments
Timer2 matches user-defined
time period and transmits
a short pulse
t
Switch Electrical State
Switch Pressed
ON
OFF
t