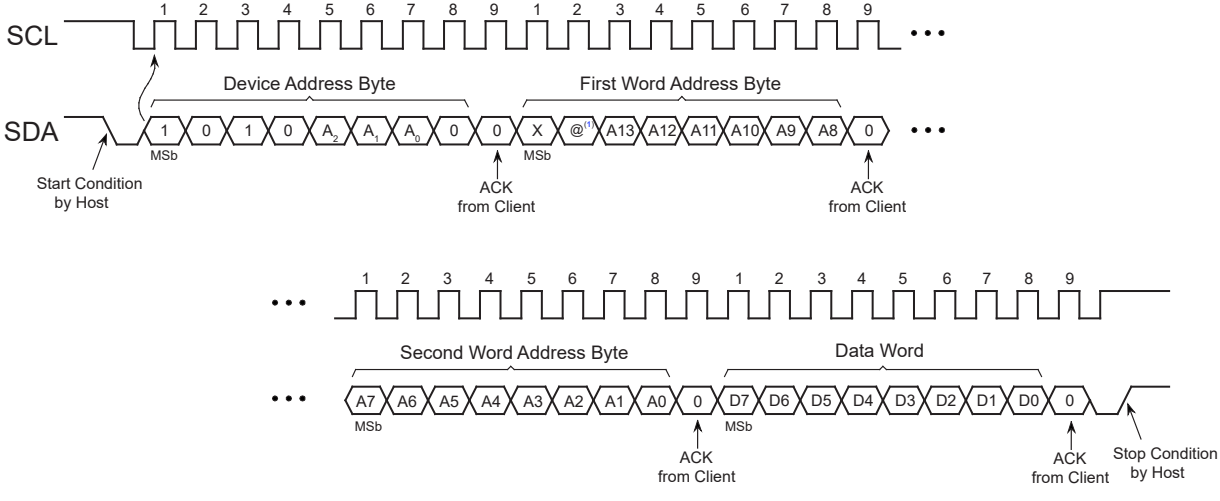
SCL
SDA
1 2 3 4 5 6 7 8 9 1 2 3 4 5 6 7 8 9
Device Address Byte
First Word Address Byte
1 0 1 0 A2 A1 A0 0 0 X @(1) A13 A12 A11 A10 A9 A8 0
MSb
MSb
Start Condition by Host
ACK from Client
ACK from Client
1 2 3 4 5 6 7 8 9 1 2 3 4 5 6 7 8 9
Second Word Address Byte
Data Word
A7 A6 A5 A4 A3 A2 A1 A0 0 D7 D6 D5 D4 D3 D2 D1 D0 0
MSb
MSb
ACK from Client
ACK from Client
Stop Condition by Host