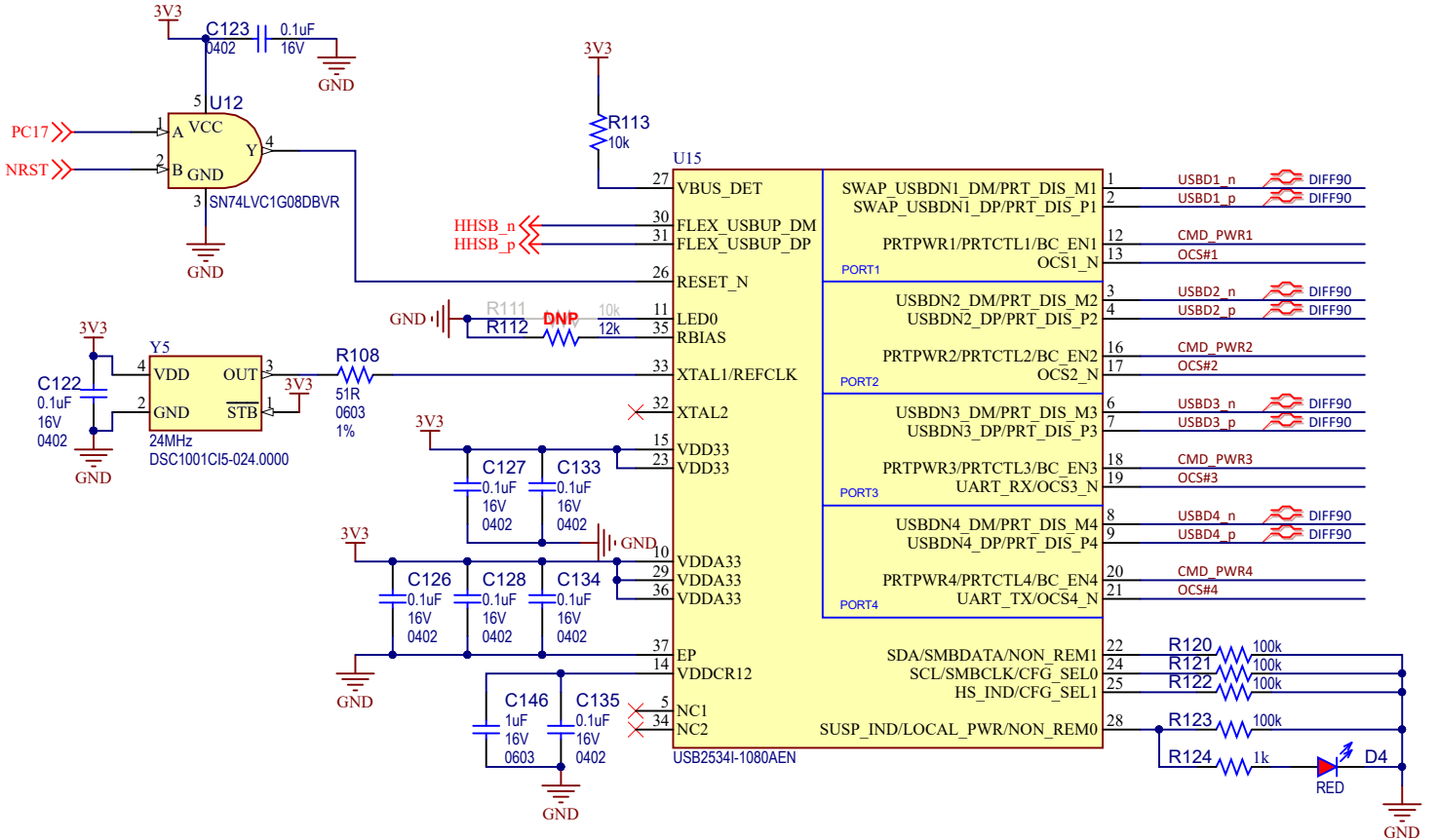
3V3
C123
0402
0.1uF
16V
GND
U12
PC17
NRST
A VCC
B GND
Y
SN74LVC1G08DBVR
3V3
R113
10k
U15
HHSB_n
HHSB_p
VBUS_DET
FLEX_USBUP_DM
FLEX_USBUP_DP
RESET_N
LED0
RBIAS
XTAL1/REFCLK
XTAL2
VDD33
VDD33
VDDA33
VDDA33
VDDA33
EP
VDDCR12
NC1
NC2
USB2534I-1080AEN
SWAP_USBDN1_DM/PRT_DIS_M1
SWAP_USBDN1_DP/PRT_DIS_P1
PRTPWR1/PRTCTL1/BC_EN1
OCS1_N
PORT1
USBDN2_DM/PRT_DIS_M2
USBDN2_DP/PRT_DIS_P2
PRTPWR2/PRTCTL2/BC_EN2
OCS2_N
PORT2
USBDN3_DM/PRT_DIS_M3
USBDN3_DP/PRT_DIS_P3
PRTPWR3/PRTCTL3/BC_EN3
UART_RX/OCS3_N
PORT3
USBDN4_DM/PRT_DIS_M4
USBDN4_DP/PRT_DIS_P4
PRTPWR4/PRTCTL4/BC_EN4
UART_TX/OCS4_N
PORT4
SDA/SMBDATA/NON_REM1
SCL/SMBCLK/CFG_SEL0
HS_IND/CFG_SEL1
SUSP_IND/LOCAL_PWR/NON_REM0
USBD1_n
USBD1_p
CMD_PWR1
OCS#1
USBD2_n
USBD2_p
CMD_PWR2
OCS#2
USBD3_n
USBD3_p
CMD_PWR3
OCS#3
USBD4_n
USBD4_p
CMD_PWR4
OCS#4
DIFF90
R111
10k
R112
DNP
12k
Y5
VDD
OUT
GND
STB
24MHz
DSC1001CI5-024.0000
C122
0.1uF
16V
0402
R108
51R
0603
1%
C127
C133
C126
C128
C134
0.1uF
16V
0402
C146
1uF
16V
0603
C135
R120
R121
R122
R123
R124
100k
1k
D4
RED