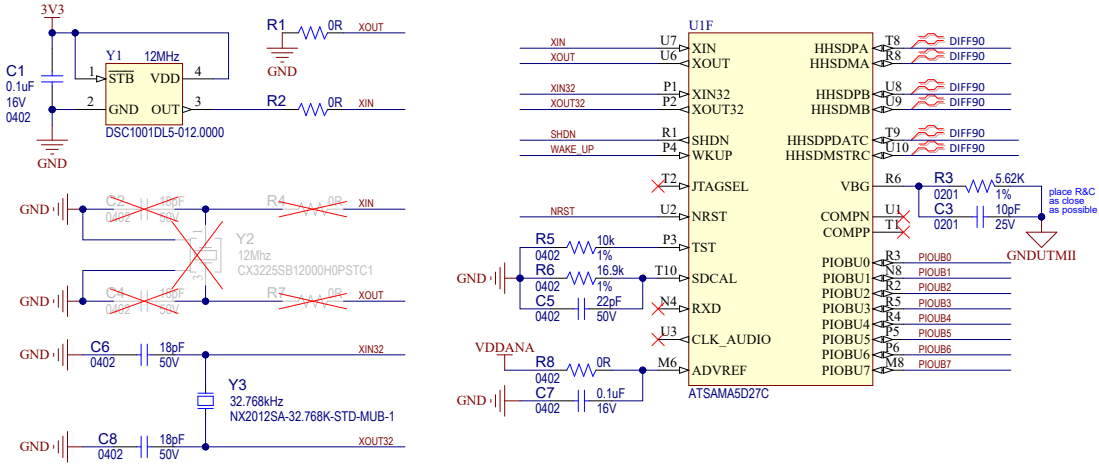
3V3
C1
0.1uF
16V
0402
GND
Y1
12MHz
STB
VDD
GND
OUT
DSC1001DL5-012.0000
R1
0R
XOUT
R2
0R
XIN
C2
C4
R4
R7
Y2
12Mhz
CX3225SB12000H0PSTC1
C6
18pF
50V
0402
XIN32
Y3
32.768kHz
NX2012SA-32.768K-STD-MUB-1
C8
XOUT32
U1F
XIN
XOUT
XIN32
XOUT32
SHDN
WAKE_UP
JTAGSEL
NRST
TST
SDCAL
RXD
CLK_AUDIO
ADVREF
ATSAMA5D27C
HHSDPA
HHSDMA
HHSDPB
HHSDMB
HHSDPDATC
HHSDMSTRC
VBG
COMPN
COMPP
PIOBU0
PIOBU1
PIOBU2
PIOBU3
PIOBU4
PIOBU5
PIOBU6
PIOBU7
DIFF90
R3
5.62K
1%
C3
10pF
25V
place R&C as close as possible
GNDUTMII
R5
10k
R6
16.9k
22pF
VDDANA
R8
C7
0.1uF