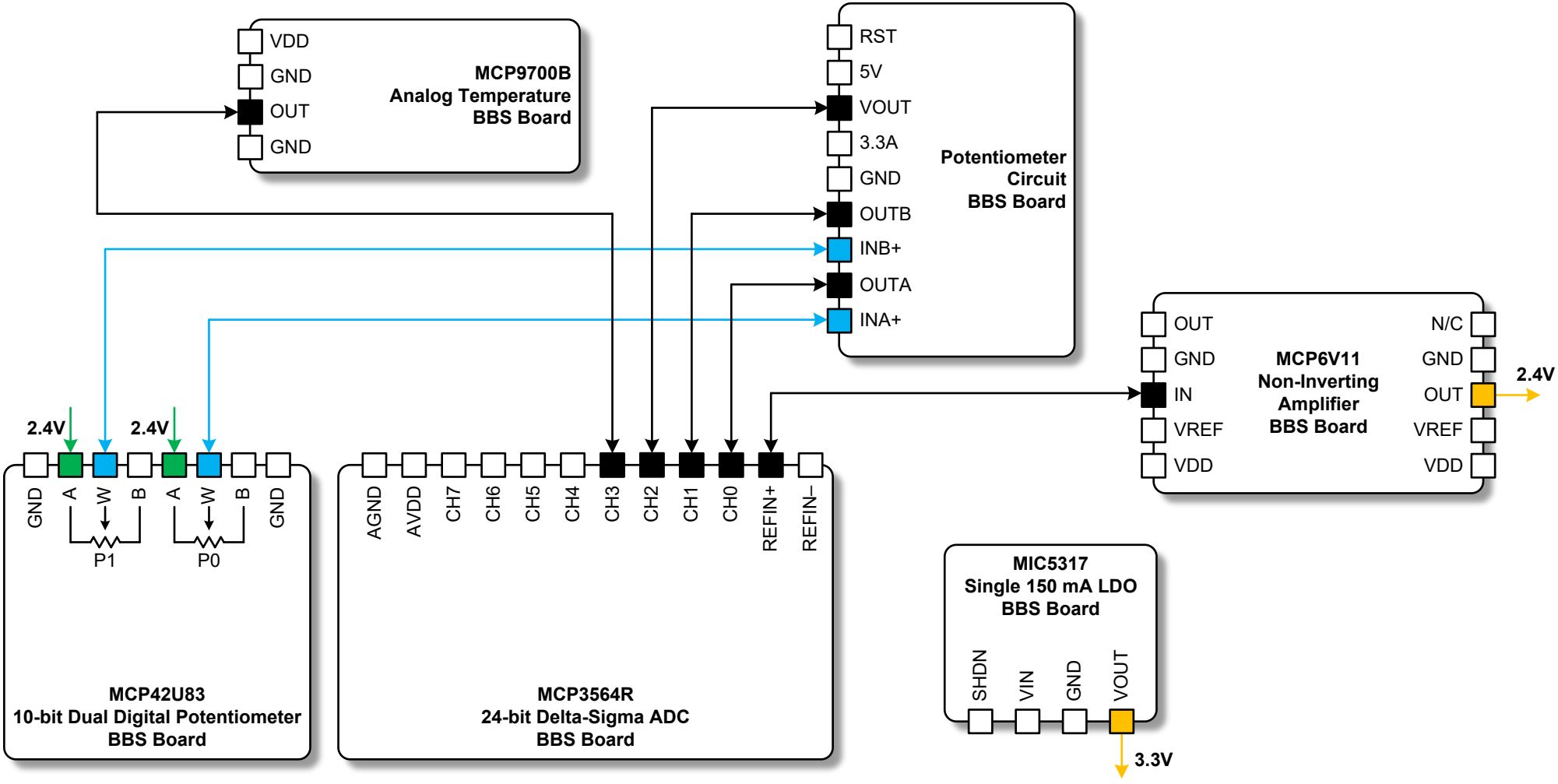
VDD
GND
OUT
GND
MCP9700B
Analog Temperature
BBS Board
RST
5V
VOUT
3.3A
GND
OUTB
INB+
OUTA
INA+
Potentiometer
Circuit
BBS Board
OUT
GND
IN
VREF
VDD
MCP6V11
Non-Inverting
Amplifier
BBS Board
N/C
GND
OUT
VREF
VDD
2.4V
2.4V
2.4V
GND
A
W
B
A
W
B
GND
P1
P0
MCP42U83
10-bit Dual Digital Potentiometer
BBS Board
AGND
AVDD
CH7
CH6
CH5
CH4
CH3
CH2
CH1
CH0
REFIN+
REFIN–
MCP3564R
24-bit Delta-Sigma ADC
BBS Board
MIC5317
Single 150 mA LDO
BBS Board
SHDN
VIN
GND
VOUT
3.3V