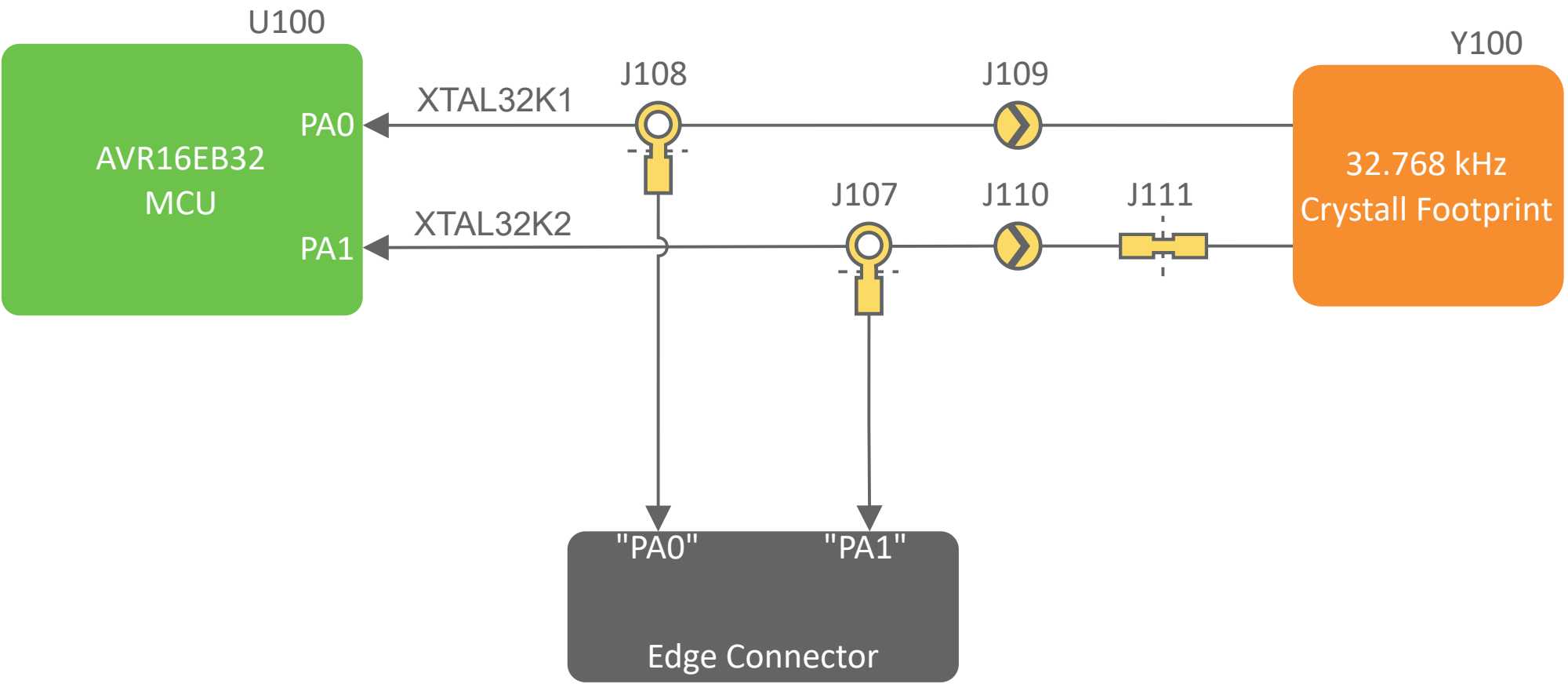
U100
AVR16EB32
MCU
PA0
PA1
XTAL32K1
XTAL32K2
J108
J109
J107
J110
J111
Y100
32.768 kHz
Crystall Footprint
"PA0"
"PA1"
Edge Connector