Buttons

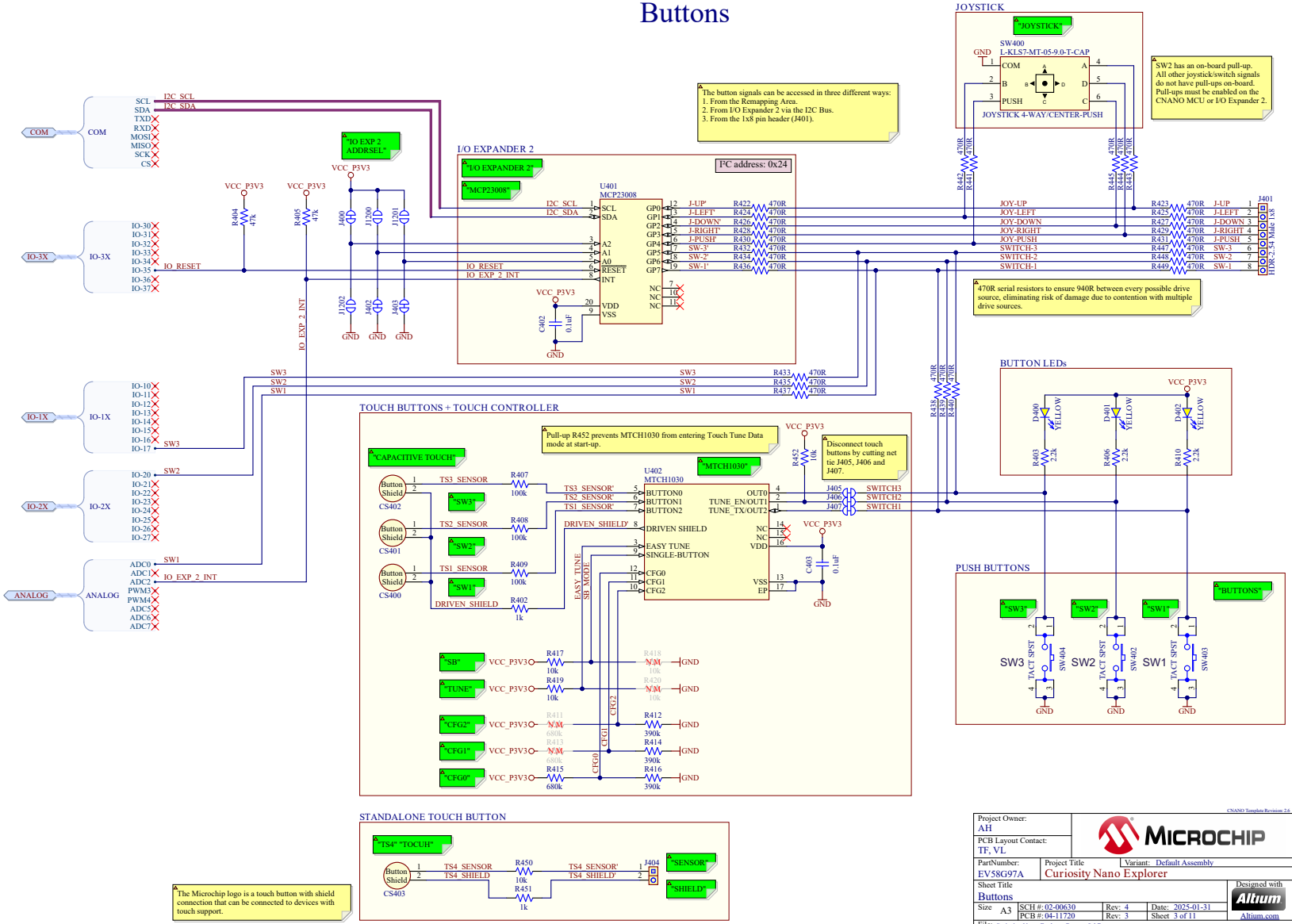
JOYSTICK
"JOYSTICK"
SW400
L-KLS7-MT-05-9.0-T-CAP
GND
COM
PUSH
JOYSTICK 4-WAY/CENTER-PUSH
SW2 has an on-board pull-up. All other joystick/switch signals do not have pull-ups on-board. Pull-ups must be enabled on the CNANO MCU or I/O Expander 2.
The button signals can be accessed in three different ways:
1. From the Remapping Area.
2. From I/O Expander 2 via the I2C Bus.
3. From the 1x8 pin header (J401).
I/O EXPANDER 2
"I/O EXPANDER 2"
"MCP23008"
I²C address: 0x24
U401
MCP23008
I2C_SCL
I2C_SDA
IO_RESET
IO_EXP_2_INT
VCC_P3V3
"IO EXP 2 ADDRSEL"
J-UP'
J-LEFT'
J-DOWN'
J-RIGHT'
J-PUSH'
SW-3'
SW-2'
SW-1'
JOY-UP
JOY-LEFT
JOY-DOWN
JOY-RIGHT
JOY-PUSH
SWITCH-3
SWITCH-2
SWITCH-1
J401
HDR-2-54 Male 1x8
470R serial resistors to ensure 940R between every possible drive source, eliminating risk of damage due to contention with multiple drive sources.
BUTTON LEDs
D400 YELLOW
D401 YELLOW
D402 YELLOW
TOUCH BUTTONS + TOUCH CONTROLLER
Pull-up R452 prevents MTCH1030 from entering Touch Tune Data mode at start-up.
Disconnect touch buttons by cutting net tie J405, J406 and J407.
"CAPACITIVE TOUCH"
"MTCH1030"
U402
MTCH1030
TS3_SENSOR
TS2_SENSOR
TS1_SENSOR
DRIVEN_SHIELD
EASY_TUNE
SB_MODE
CFG0
CFG1
CFG2
"SB"
"TUNE"
"CFG2"
"CFG1"
"CFG0"
PUSH BUTTONS
"BUTTONS"
"SW3"
"SW2"
"SW1"
TACT SPST
SW404
SW402
SW403
STANDALONE TOUCH BUTTON
"TS4" "TOCUH"
TS4_SENSOR
TS4_SHIELD
TS4_SENSOR'
TS4_SHIELD'
J404
"SENSOR"
"SHIELD"
The Microchip logo is a touch button with shield connection that can be connected to devices with touch support.
COM
IO-3X
IO-1X
IO-2X
ANALOG
CNANO Template Revision: 2.0
Project Owner: AH
PCB Layout Contact: TF, VL
PartNumber: EV58G97A
Project Title: Curiosity Nano Explorer
Variant: Default Assembly
Sheet Title: Buttons
Size: A3
SCH #: 02-00630
PCB #: 04-11720
Rev: 4
Rev: 3
Date: 2025-01-31
Sheet 3 of 11
File: Curiosity_Nano_Explorer_Buttons.SchDoc
Designed with Altium
Altium.com