USB Bridge

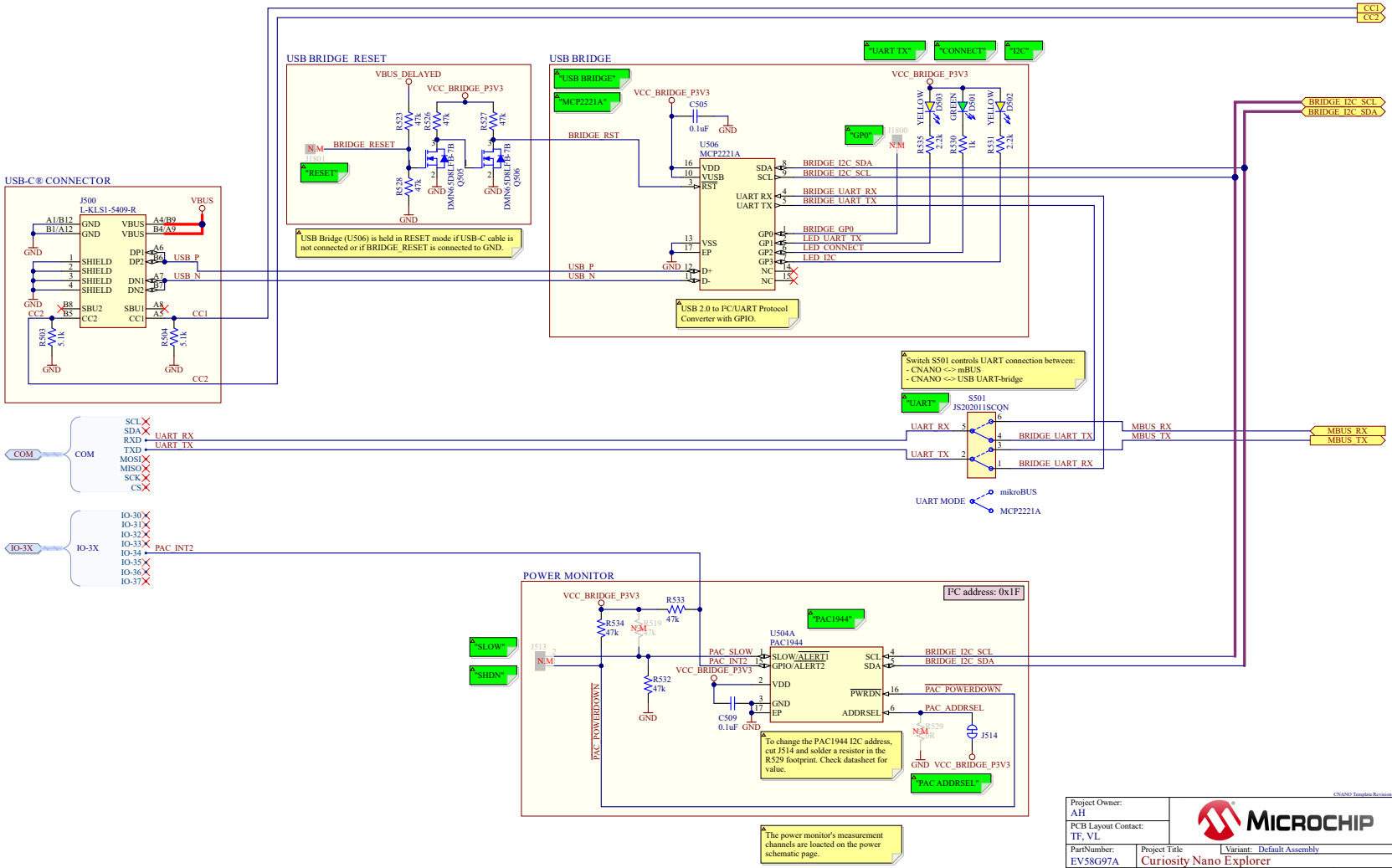

CNANO Template Revision: 2.0

Project Owner: AH	MICROCHIP
PCB Layout Contact: TF, VL	
PartNumber: EV58G97A	Project Title: Curiosity Nano Explorer — Variant: Default Assembly
Sheet Title: USB Bridge	Designed with Altium — Altium.com
Size: A3	SCH #: 02-00630 — Rev: 4 — Date: 2025-01-31
	PCB #: 04-11720 — Rev: 3 — Sheet: 9 of 11
File: Curiosity_Nano_Explorer_USB_Bridge.SchDoc	