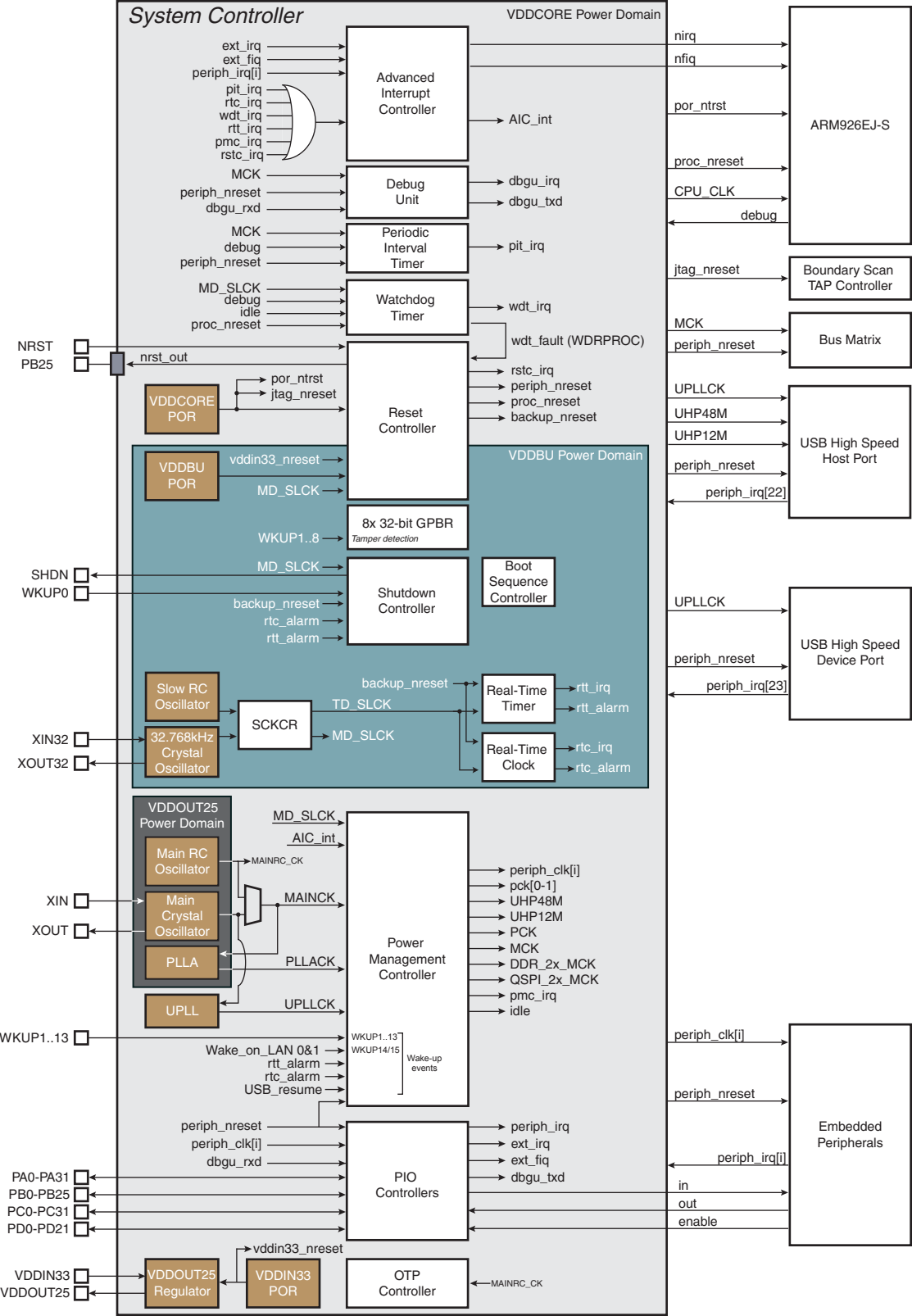
System Controller
VDDCORE Power Domain
ext_irq
ext_fiq
periph_irq[i]
pit_irq
rtc_irq
wdt_irq
rtt_irq
pmc_irq
rstc_irq
Advanced Interrupt Controller
AIC_int
nirq
nfiq
por_ntrst
ARM926EJ-S
MCK
periph_nreset
dbgu_rxd
Debug Unit
dbgu_irq
dbgu_txd
proc_nreset
CPU_CLK
debug
MCK
debug
periph_nreset
Periodic Interval Timer
pit_irq
jtag_nreset
Boundary Scan TAP Controller
MD_SLCK
debug
idle
proc_nreset
Watchdog Timer
wdt_irq
wdt_fault (WDRPROC)
MCK
periph_nreset
Bus Matrix
NRST
PB25
nrst_out
VDDCORE POR
por_ntrst
jtag_nreset
Reset Controller
rstc_irq
periph_nreset
proc_nreset
backup_nreset
UPLLCK
UHP48M
UHP12M
periph_nreset
periph_irq[22]
USB High Speed Host Port
VDDBU Power Domain
VDDBU POR
vddin33_nreset
MD_SLCK
8x 32-bit GPBR
Tamper detection
WKUP1..8
SHDN
WKUP0
MD_SLCK
backup_nreset
rtc_alarm
rtt_alarm
Shutdown Controller
Boot Sequence Controller
UPLLCK
periph_nreset
periph_irq[23]
USB High Speed Device Port
Slow RC Oscillator
SCKCR
backup_nreset
TD_SLCK
MD_SLCK
Real-Time Timer
rtt_irq
rtt_alarm
XIN32
XOUT32
32.768kHz Crystal Oscillator
Real-Time Clock
rtc_irq
rtc_alarm
VDDOUT25 Power Domain
Main RC Oscillator
MAINRC_CK
XIN
XOUT
Main Crystal Oscillator
MAINCK
PLLA
PLLACK
UPLL
UPLLCK
MD_SLCK
AIC_int
Power Management Controller
periph_clk[i]
pck[0-1]
UHP48M
UHP12M
PCK
MCK
DDR_2x_MCK
QSPI_2x_MCK
pmc_irq
idle
WKUP1..13
Wake_on_LAN 0&1
rtt_alarm
rtc_alarm
USB_resume
WKUP1..13
WKUP14/15
Wake-up events
periph_clk[i]
periph_nreset
periph_irq[i]
Embedded Peripherals
periph_nreset
periph_clk[i]
dbgu_rxd
PIO Controllers
periph_irq
ext_irq
ext_fiq
dbgu_txd
PA0-PA31
PB0-PB25
PC0-PC31
PD0-PD21
in
out
enable
vddin33_nreset
VDDIN33
VDDOUT25
VDDOUT25 Regulator
VDDIN33 POR
OTP Controller
MAINRC_CK