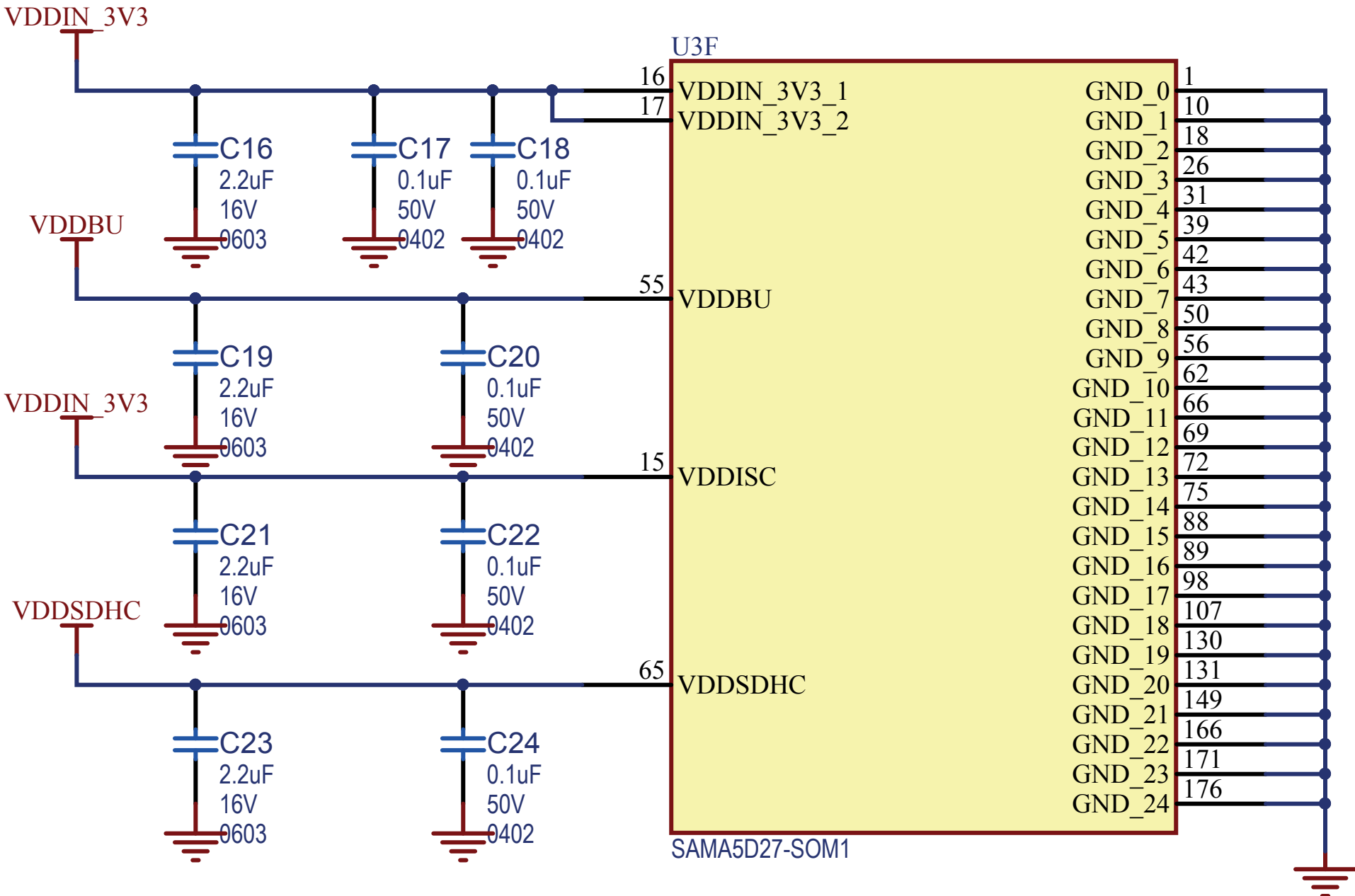
VDDIN_3V3
U3F
16
17
VDDIN_3V3_1
VDDIN_3V3_2
C16
2.2uF
16V
0603
C17
0.1uF
50V
0402
C18
0.1uF
50V
0402
VDDBU
55
VDDBU
C19
2.2uF
16V
0603
C20
0.1uF
50V
0402
VDDIN_3V3
15
VDDISC
C21
2.2uF
16V
0603
C22
0.1uF
50V
0402
VDDSDHC
65
VDDSDHC
C23
2.2uF
16V
0603
C24
0.1uF
50V
0402
GND_0 1
GND_1 10
GND_2 18
GND_3 26
GND_4 31
GND_5 39
GND_6 42
GND_7 43
GND_8 50
GND_9 56
GND_10 62
GND_11 66
GND_12 69
GND_13 72
GND_14 75
GND_15 88
GND_16 89
GND_17 98
GND_18 107
GND_19 130
GND_20 131
GND_21 149
GND_22 166
GND_23 171
GND_24 176
SAMA5D27-SOM1