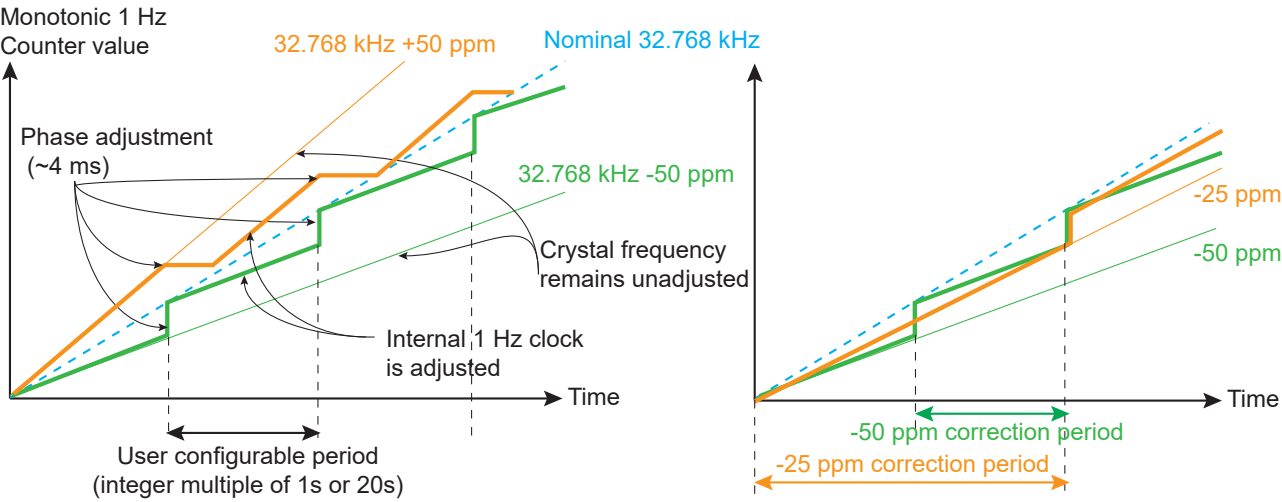
Monotonic 1 Hz
Counter value
32.768 kHz +50 ppm
Nominal 32.768 kHz
Phase adjustment
(~4 ms)
32.768 kHz -50 ppm
Crystal frequency
remains unadjusted
Internal 1 Hz clock
is adjusted
Time
User configurable period
(integer multiple of 1s or 20s)
-25 ppm
-50 ppm
Time
-50 ppm correction period
-25 ppm correction period

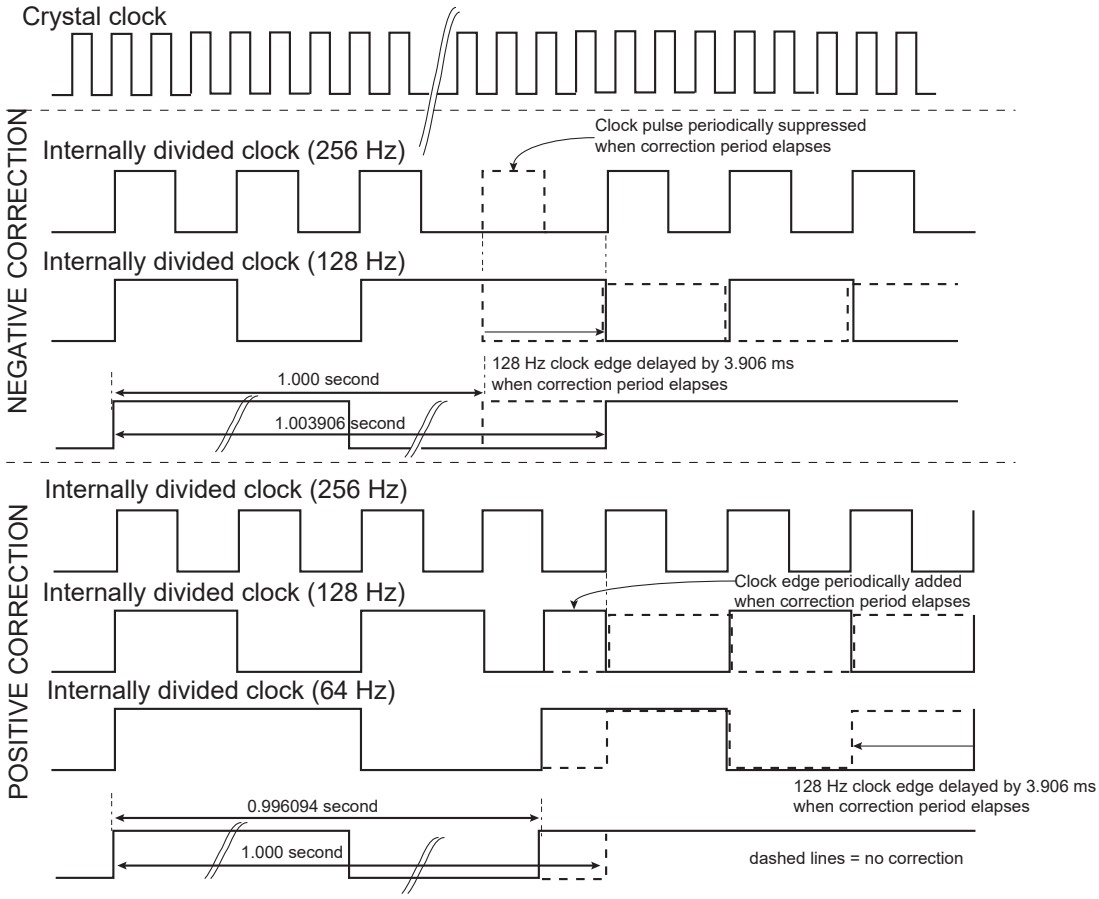
Crystal clock
NEGATIVE CORRECTION
Internally divided clock (256 Hz)
Clock pulse periodically suppressed
when correction period elapses
Internally divided clock (128 Hz)
128 Hz clock edge delayed by 3.906 ms
when correction period elapses
1.000 second
1.003906 second
POSITIVE CORRECTION
Internally divided clock (256 Hz)
Internally divided clock (128 Hz)
Clock edge periodically added
when correction period elapses
Internally divided clock (64 Hz)
128 Hz clock edge delayed by 3.906 ms
when correction period elapses
0.996094 second
1.000 second
dashed lines = no correction