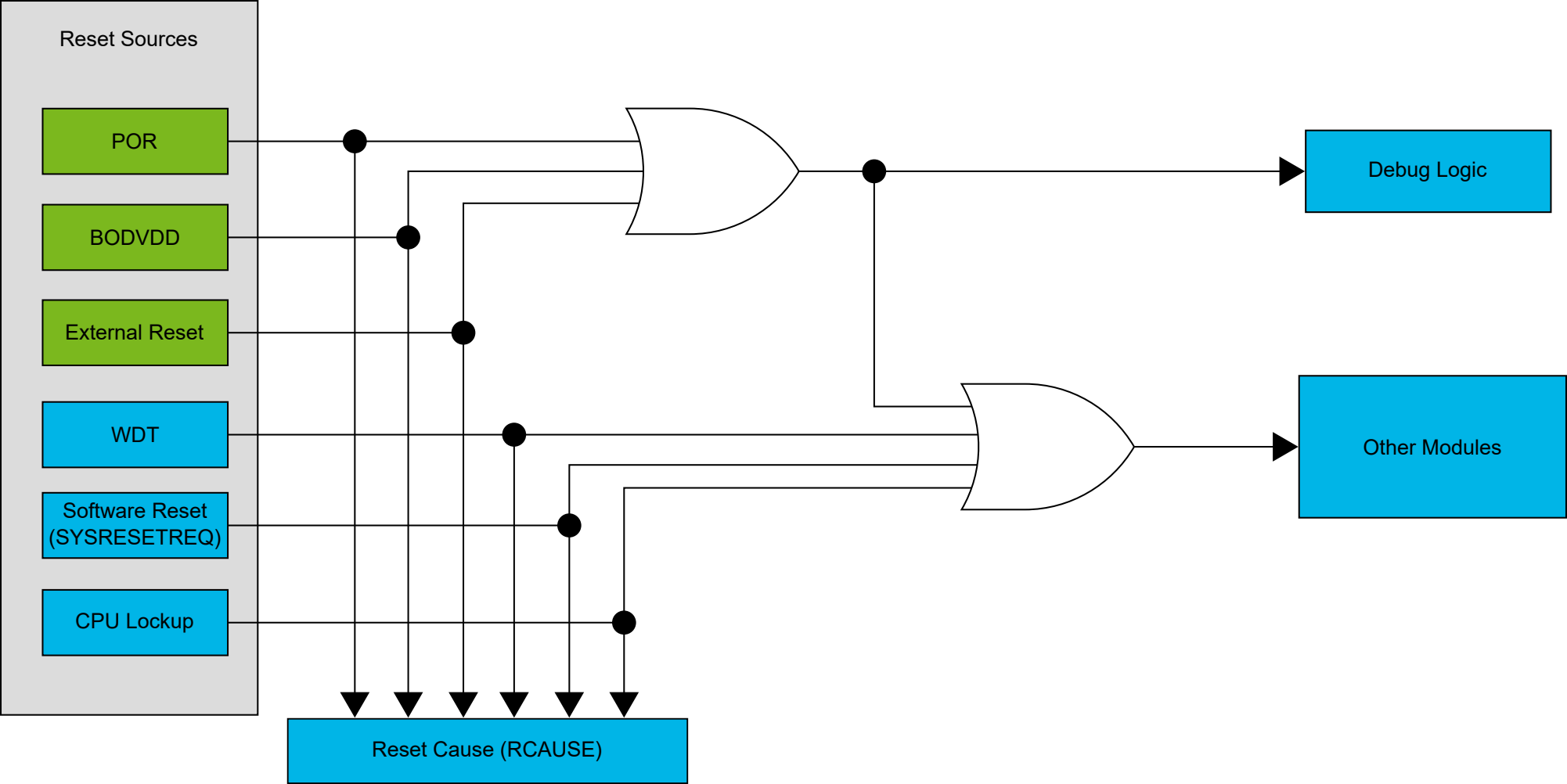
Reset Sources
POR
BODVDD
External Reset
WDT
Software Reset
(SYSRESETREQ)
CPU Lockup
Debug Logic
Other Modules
Reset Cause (RCAUSE)