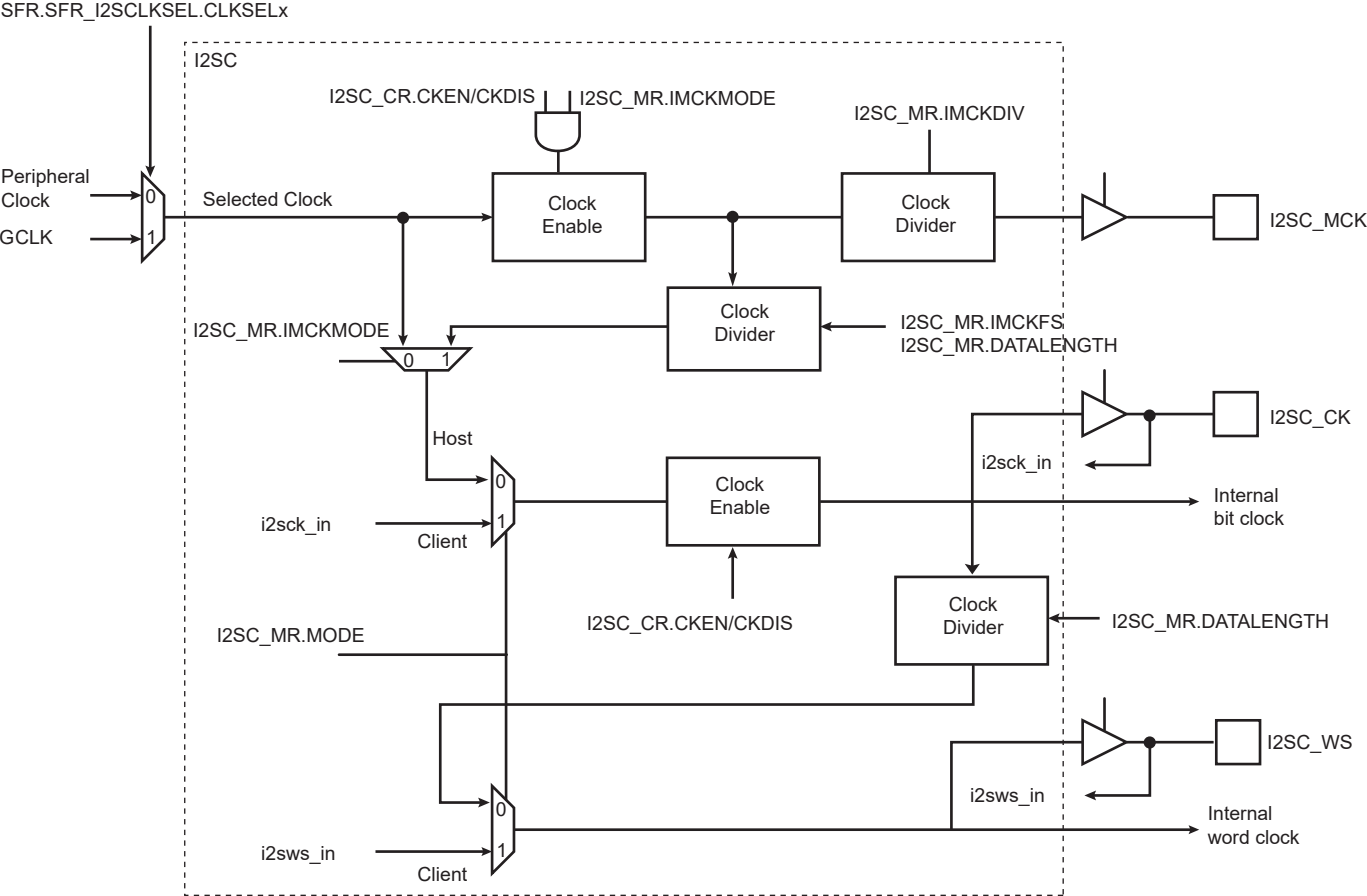
SFR.SFR_I2SCLKSEL.CLKSELx
I2SC
I2SC_CR.CKEN/CKDIS
I2SC_MR.IMCKMODE
I2SC_MR.IMCKDIV
Peripheral Clock
GCLK
0
1
Selected Clock
Clock Enable
Clock Divider
I2SC_MCK
Clock Divider
I2SC_MR.IMCKFS
I2SC_MR.DATALENGTH
I2SC_MR.IMCKMODE
0 1
I2SC_CK
Host
i2sck_in
0
1
Clock Enable
Internal bit clock
i2sck_in
Client
I2SC_CR.CKEN/CKDIS
Clock Divider
I2SC_MR.DATALENGTH
I2SC_MR.MODE
I2SC_WS
i2sws_in
0
1
Internal word clock
i2sws_in
Client