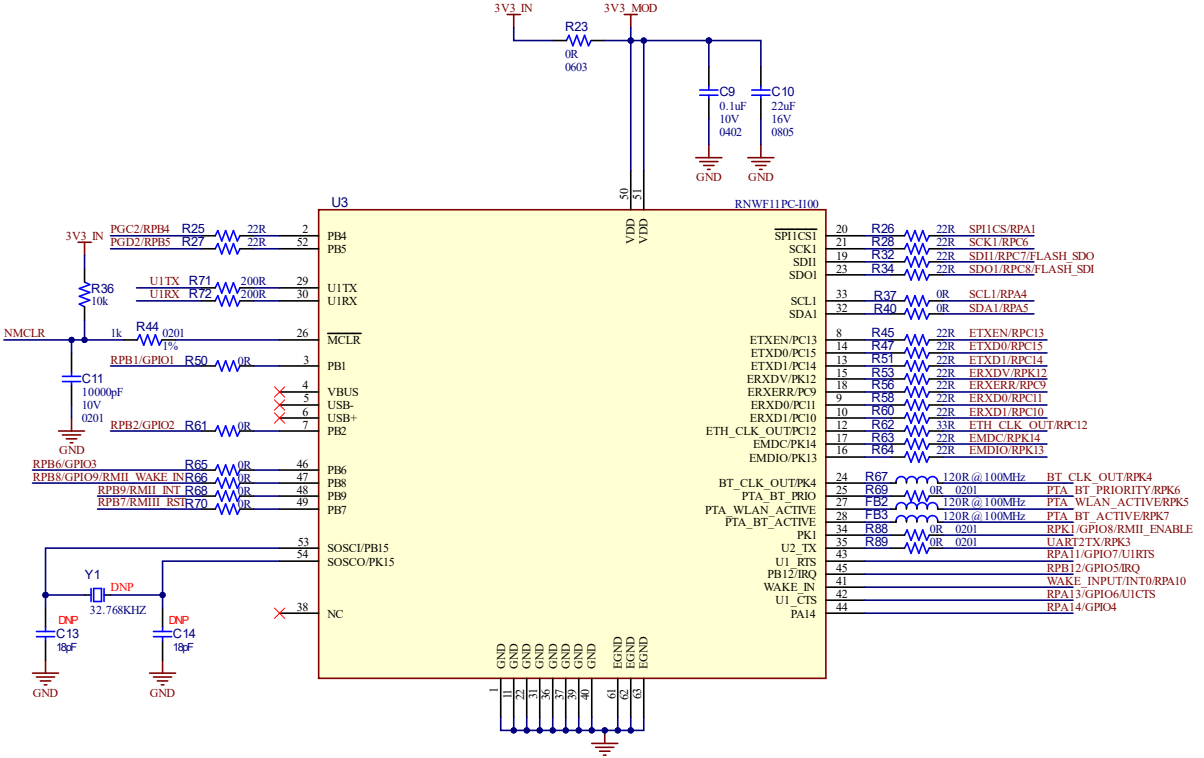
3V3_IN
3V3_MOD
R23
0R
0603
C9
0.1uF
10V
0402
C10
22uF
16V
0805
GND
U3
RNWF11PC-I100
50
51
VDD
VDD
3V3_IN
PGC2/RPB4 R25 22R 2 PB4
PGD2/RPB5 R27 22R 52 PB5
R36
10k
U1TX R71 200R 29 U1TX
U1RX R72 200R 30 U1RX
NMCLR
1k R44 0201 1% 26 MCLR
RPB1/GPIO1 R50 0R 3 PB1
C11
10000pF
10V
0201
4 VBUS
5 USB-
6 USB+
RPB2/GPIO2 R61 0R 7 PB2
RPB6/GPIO3 R65 0R 46 PB6
RPB8/GPIO9/RMII_WAKE_IN R66 0R 47 PB8
RPB9/RMII_INT R68 0R 48 PB9
RPB7/RMIII_RST R70 0R 49 PB7
53 SOSCI/PB15
54 SOSCO/PK15
Y1
DNP
32.768KHZ
DNP
C13
18pF
DNP
C14
18pF
38 NC
SPI1CS1 20 R26 22R SPI1CS/RPA1
SCK1 21 R28 22R SCK1/RPC6
SDI1 19 R32 22R SDI1/RPC7/FLASH_SDO
SDO1 23 R34 22R SDO1/RPC8/FLASH_SDI
SCL1 33 R37 0R SCL1/RPA4
SDA1 32 R40 0R SDA1/RPA5
ETXEN/PC13 8 R45 22R ETXEN/RPC13
ETXD0/PC15 14 R47 22R ETXD0/RPC15
ETXD1/PC14 13 R51 22R ETXD1/RPC14
ERXDV/PK12 15 R53 22R ERXDV/RPK12
ERXERR/PC9 18 R56 22R ERXERR/RPC9
ERXD0/PC11 9 R58 22R ERXD0/RPC11
ERXD1/PC10 10 R60 22R ERXD1/RPC10
ETH_CLK_OUT/PC12 12 R62 33R ETH_CLK_OUT/RPC12
EMDC/PK14 17 R63 22R EMDC/RPK14
EMDIO/PK13 16 R64 22R EMDIO/RPK13
BT_CLK_OUT/PK4 24 R67 120R@100MHz BT_CLK_OUT/RPK4
PTA_BT_PRIO 25 R69 0R 0201 PTA_BT_PRIORITY/RPK6
PTA_WLAN_ACTIVE 27 FB2 120R@100MHz PTA_WLAN_ACTIVE/RPK5
PTA_BT_ACTIVE 28 FB3 120R@100MHz PTA_BT_ACTIVE/RPK7
PK1 34 R88 0R 0201 RPK1/GPIO8/RMII_ENABLE
U2_TX 35 R89 0R 0201 UART2TX/RPK3
U1_RTS 43 RPA11/GPIO7/U1RTS
PB12/IRQ 45 RPB12/GPIO5/IRQ
WAKE_IN 41 WAKE_INPUT/INT0/RPA10
U1_CTS 42 RPA13/GPIO6/U1CTS
PA14 44 RPA14/GPIO4
GND GND GND GND GND GND GND GND EGND EGND EGND
1 11 27 36 37 39 40 61 62 63
GND