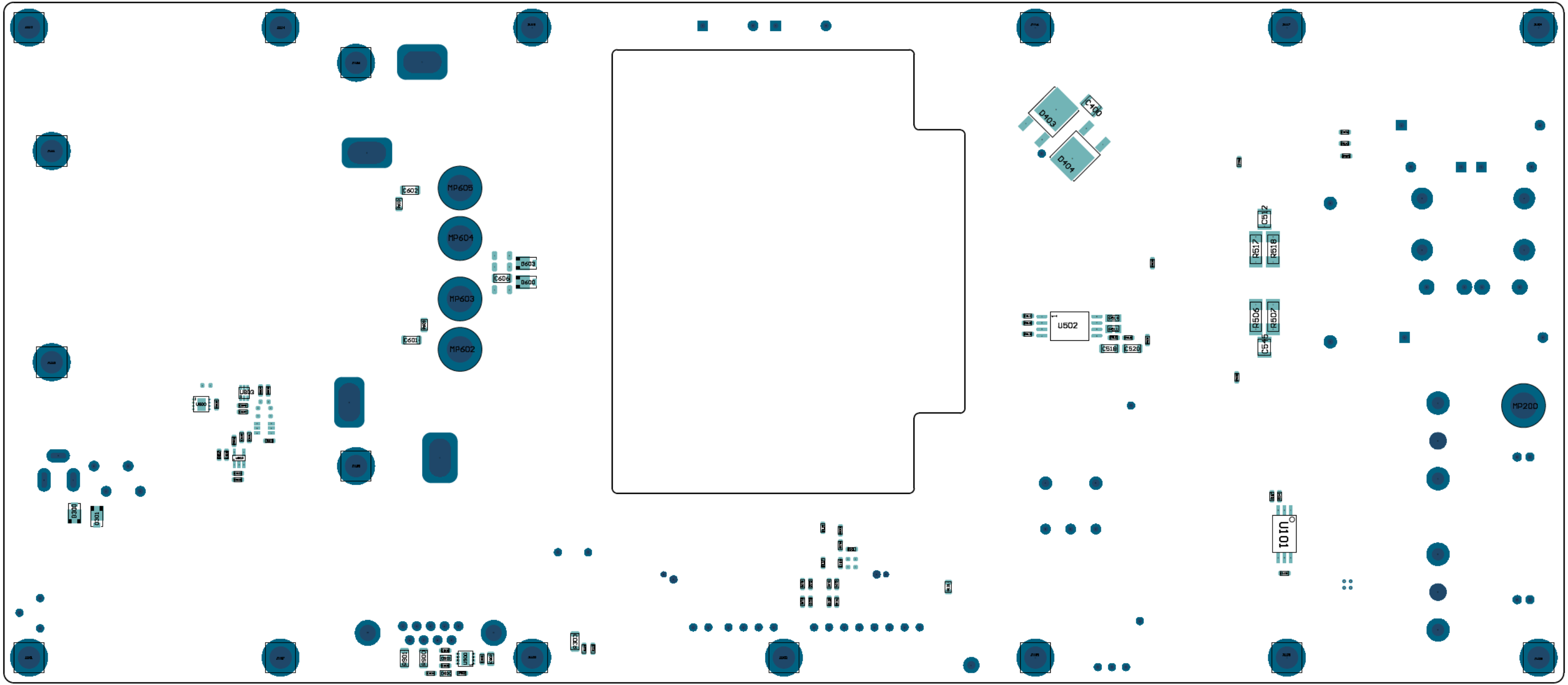
MP605
MP604
MP603
MP602
C602
C601
C606
D603
D600
D403
D404
C400
U502
C518
C520
C512
R517
R518
R506
R507
C545
MP200
U101
U803
U800
D300
D301
R303
R901
R900
U900