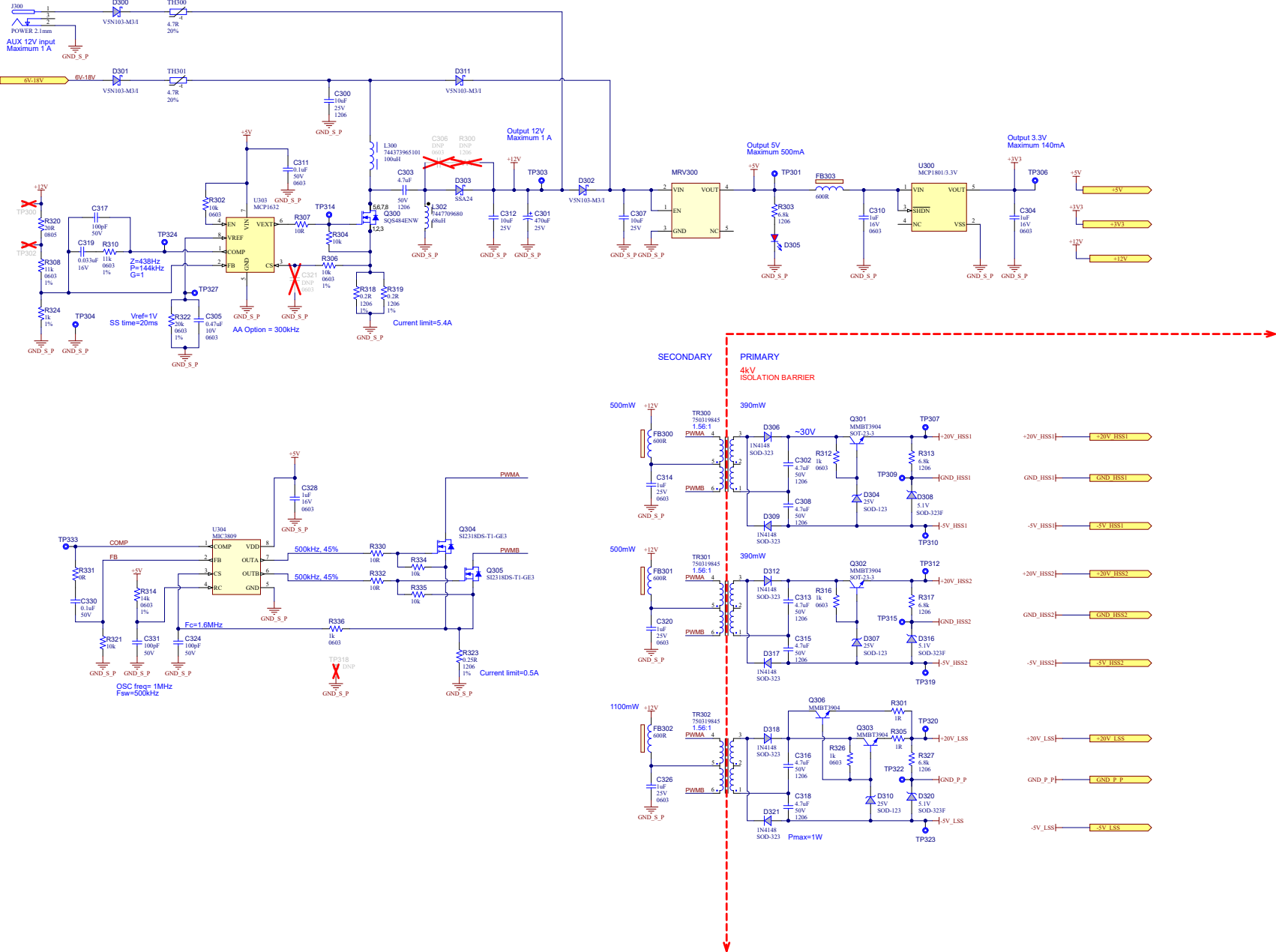
J300
POWER 2.1mm
AUX 12V input
Maximum 1 A
D300
V5N103-M3/I
TH300
4.7R
20%
6V-18V
D301
TH301
C300
10uF
25V
1206
D311
Output 12V
Maximum 1 A
L300
74437396510 1
100uH
C306
DNP
0603
R300
DNP
1206
C303
4.7uF
50V
1206
D303
SSA24
L302
7447709680
68uH
C312
10uF
25V
C301
470uF
25V
TP303
D302
V5N103-M3/I
C307
10uF
25V
MRV300
VIN
VOUT
EN
GND
NC
Output 5V
Maximum 500mA
TP301
R303
6.8k
1206
D305
FB303
600R
C310
1uF
16V
0603
U300
MCP1801/3.3V
SHDN
VSS
Output 3.3V
Maximum 140mA
TP306
C304
1uF
16V
0603
+5V
+3V3
+12V
GND_S_P
C311
0.1uF
50V
0603
U303
MCP1632
R302
10k
0603
VIN
VEXT
VREF
COMP
FB
CS
TP314
R307
10k
R304
10k
Q300
SQS484ENW
R306
10k
0603
1%
C321
DNP
0603
R318
0.2R
1206
1%
R319
0.2R
1206
1%
Current limit=5.4A
TP300
TP302
R320
20R
0805
R308
11k
0603
1%
C317
100pF
50V
C319
0.033uF
16V
R310
11k
0603
1%
Z=438Hz
P=144kHz
G=1
TP324
TP327
R324
1k
1%
TP304
Vref=1V
SS time=20ms
R322
30k
0603
1%
C305
0.47uF
10V
0603
AA Option = 300kHz
SECONDARY
PRIMARY
4kV
ISOLATION BARRIER
500mW
FB300
600R
C314
1uF
25V
0603
TR300
750319845
1.56:1
PWMA
PWMB
390mW
D306
1N4148
SOD-323
~30V
Q301
MMBT3904
SOT-23-3
TP307
+20V_HSS1
R312
1k
0603
C302
4.7uF
50V
1206
R313
6.8k
1206
TP309
GND_HSS1
D304
25V
SOD-123
D308
5.1V
SOD-323F
C308
4.7uF
50V
1206
D309
1N4148
SOD-323
-5V_HSS1
TP310
FB301
600R
C320
1uF
25V
0603
TR301
750319845
1.56:1
D312
1N4148
SOD-323
Q302
MMBT3904
SOT-23-3
TP312
+20V_HSS2
C313
4.7uF
50V
1206
R316
1k
0603
R317
6.8k
1206
TP315
GND_HSS2
D307
25V
SOD-123
D316
5.1V
SOD-323F
C315
4.7uF
50V
1206
D317
1N4148
SOD-323
-5V_HSS2
TP319
1100mW
FB302
600R
C326
1uF
25V
0603
TR302
750319845
1.56:1
D318
1N4148
SOD-323
Q306
MMBT3904
R301
1R
TP320
+20V_LSS
Q303
MMBT3904
R305
1R
C316
4.7uF
50V
1206
R326
1k
0603
R327
6.8k
1206
TP322
GND_P_P
D310
25V
SOD-123
D320
5.1V
SOD-323F
C318
4.7uF
50V
1206
D321
1N4148
SOD-323
Pmax=1W
-5V_LSS
TP323
U304
MIC3809
COMP
FB
CS
RC
VDD
OUTA
OUTB
GND
TP333
R331
0R
C330
0.1uF
50V
R314
14k
0603
1%
R321
10k
C331
100pF
50V
C324
100pF
50V
C328
1uF
16V
0603
500kHz, 45%
R330
10R
R332
10R
R334
10k
R335
10k
Q304
SI2318DS-T1-GE3
Q305
SI2318DS-T1-GE3
PWMA
PWMB
Fc=1.6MHz
R336
1k
0603
TP318
DNP
R323
0.25R
1206
1%
Current limit=0.5A
OSC freq= 1MHz
Fsw=500kHz