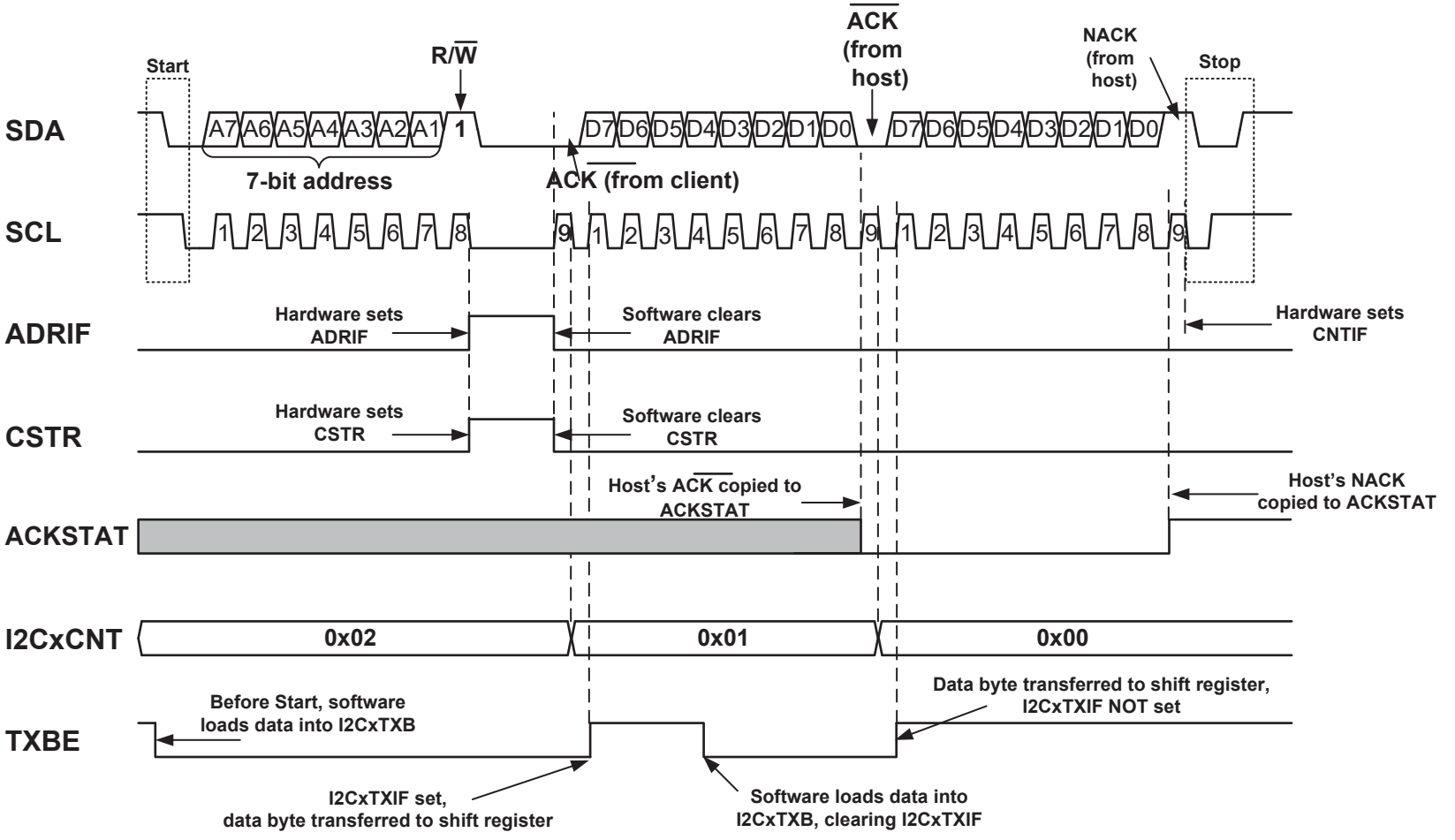
Start
R/W
ACK (from host)
NACK (from host)
Stop
SDA
A7 A6 A5 A4 A3 A2 A1 1
D7 D6 D5 D4 D3 D2 D1 D0
D7 D6 D5 D4 D3 D2 D1 D0
7-bit address
ACK (from client)
SCL
1 2 3 4 5 6 7 8 9 1 2 3 4 5 6 7 8 9 1 2 3 4 5 6 7 8 9
ADRIF
Hardware sets ADRIF
Software clears ADRIF
Hardware sets CNTIF
CSTR
Hardware sets CSTR
Software clears CSTR
ACKSTAT
Host's ACK copied to ACKSTAT
Host's NACK copied to ACKSTAT
I2CxCNT
0x02
0x01
0x00
TXBE
Before Start, software loads data into I2CxTXB
Data byte transferred to shift register, I2CxTXIF NOT set
I2CxTXIF set, data byte transferred to shift register
Software loads data into I2CxTXB, clearing I2CxTXIF