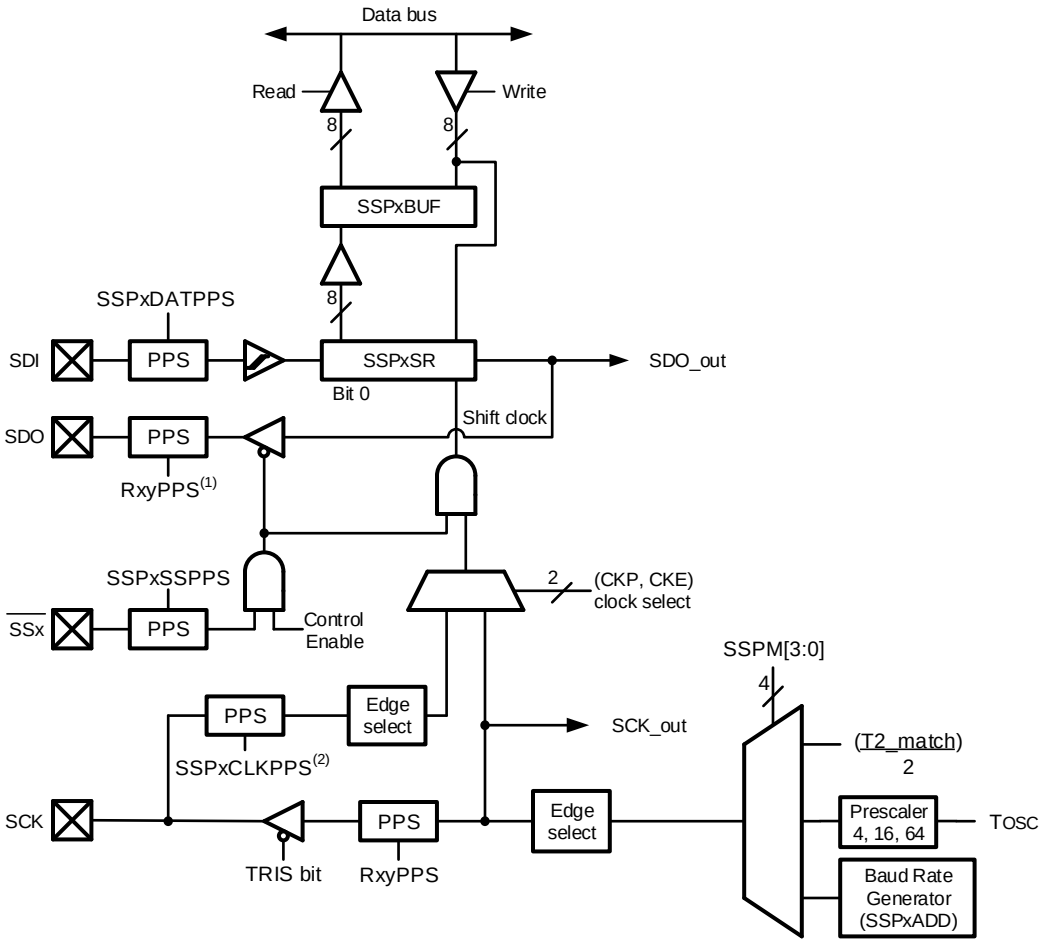

Note 1: Output selection for Master mode
2: Input selection for Slave and Master modes