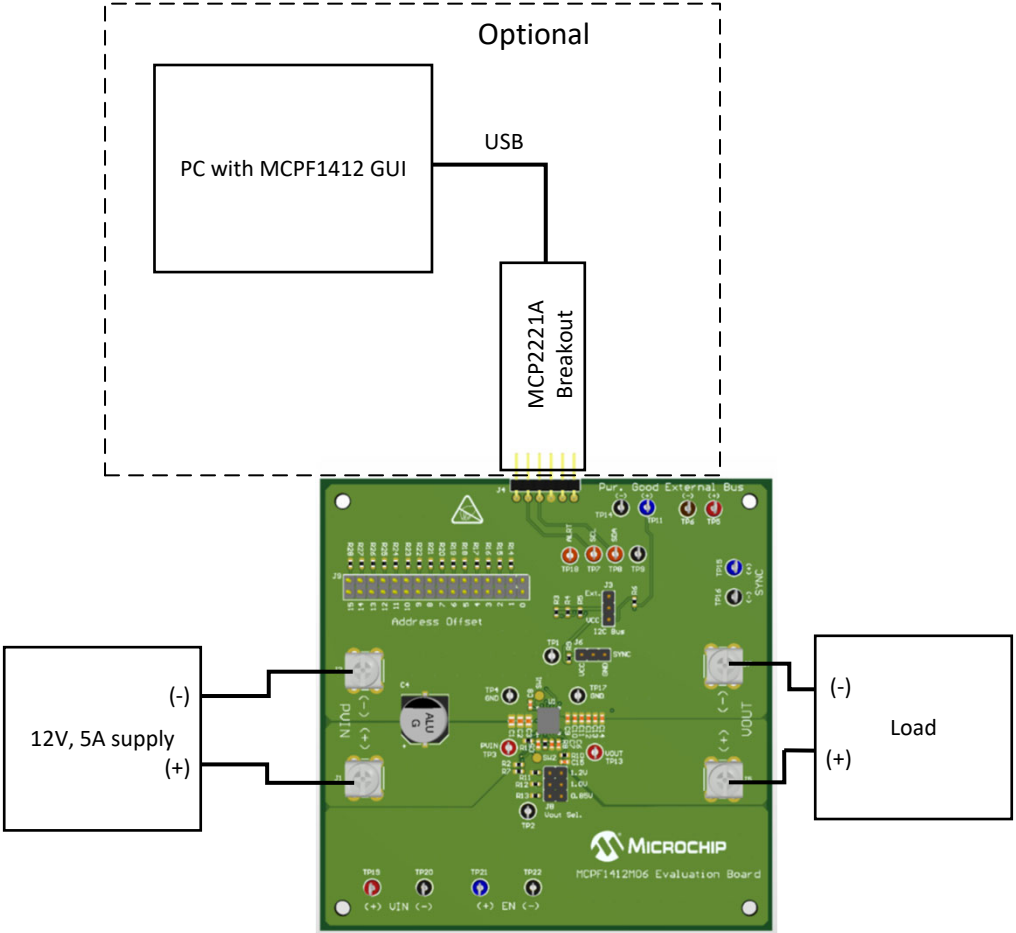
Optional
PC with MCPF1412 GUI
USB
MCP2221A Breakout
12V, 5A supply
(-)
(+)
Load
(-)
(+)
VIN
VOUT
Pwr. Good External Bus
Address Offset
12C Bus
SYNC
MICROCHIP
MCPF1412M06 Evaluation Board
(+) VIN (-)
(+) EN (-)