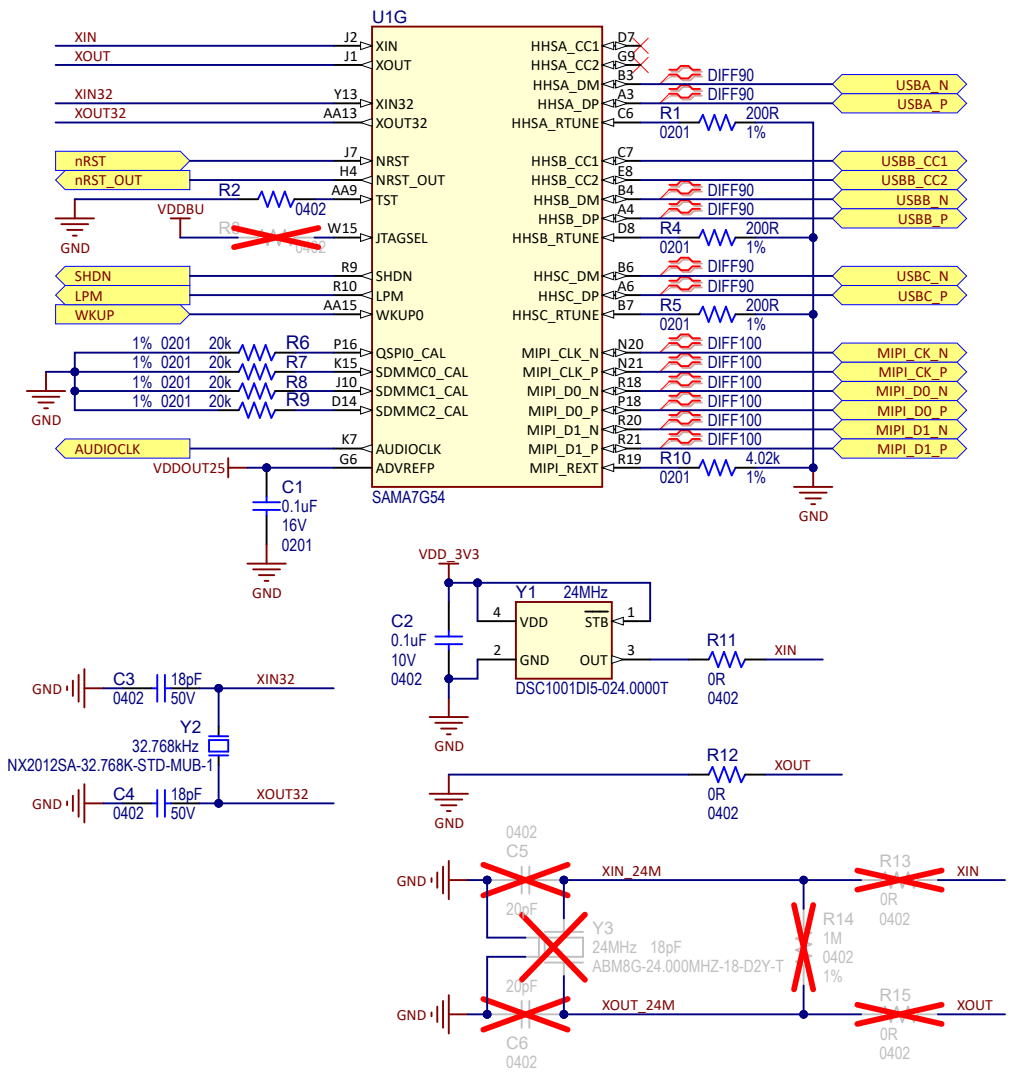
U1G
SAMA7G54
XIN
XOUT
XIN32
XOUT32
nRST
nRST_OUT
SHDN
LPM
WKUP
AUDIOCLK
VDDBU
VDDOUT25
GND
R2 0402
R3 0402
R6 R7 R8 R9 20k 1% 0201
C1 0.1uF 16V 0201
HHSA_CC1
HHSA_CC2
HHSA_DM
HHSA_DP
HHSA_RTUNE
HHSB_CC1
HHSB_CC2
HHSB_DM
HHSB_DP
HHSB_RTUNE
HHSC_DM
HHSC_DP
HHSC_RTUNE
MIPI_CK_N
MIPI_CK_P
MIPI_D0_N
MIPI_D0_P
MIPI_D1_N
MIPI_D1_P
MIPI_REXT
DIFF90
DIFF100
USBA_N
USBA_P
USBB_CC1
USBB_CC2
USBB_N
USBB_P
USBC_N
USBC_P
R1 R4 R5 200R 1% 0201
R10 4.02k 1% 0201
VDD_3V3
Y1 24MHz
VDD
STB
GND
OUT
DSC1001DI5-024.0000T
C2 0.1uF 10V 0402
R11 0R 0402
R12 0R 0402
C3 18pF 50V 0402
C4 18pF 50V 0402
Y2 32.768kHz
NX2012SA-32.768K-STD-MUB-1
XIN32
XOUT32
C5 20pF 0402
C6 20pF 0402
Y3 24MHz 18pF
ABM8G-24.000MHZ-18-D2Y-T
XIN_24M
XOUT_24M
R13 0R 0402
R14 1M 0402 1%
R15 0R 0402