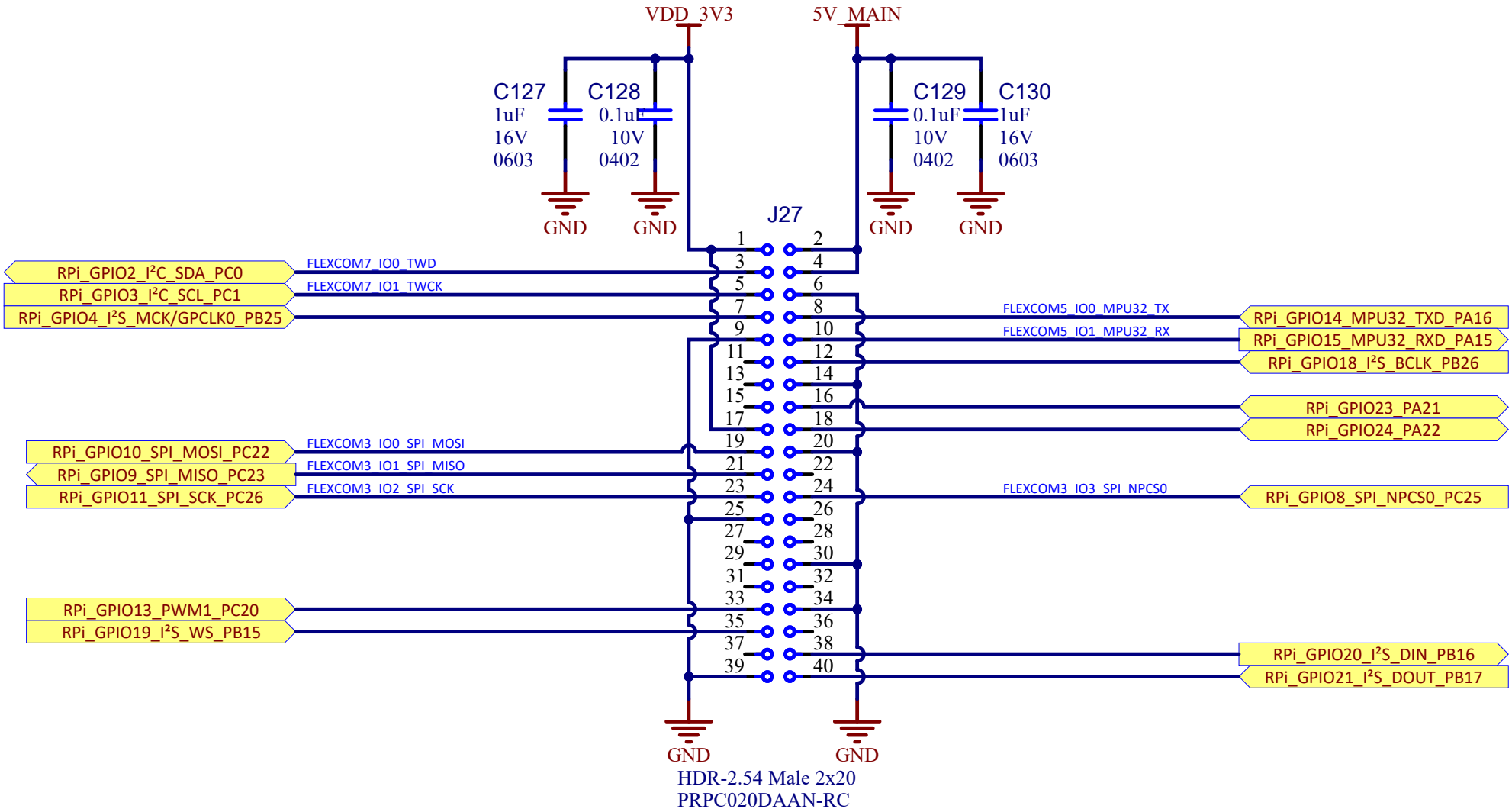
VDD_3V3
5V_MAIN
C127
1uF
16V
0603
C128
0.1uF
10V
0402
C129
0.1uF
10V
0402
C130
1uF
16V
0603
GND
J27
RPi_GPIO2_I²C_SDA_PC0
RPi_GPIO3_I²C_SCL_PC1
RPi_GPIO4_I²S_MCK/GPCLK0_PB25
FLEXCOM7_IO0_TWD
FLEXCOM7_IO1_TWCK
FLEXCOM5_IO0_MPU32_TX
FLEXCOM5_IO1_MPU32_RX
RPi_GPIO14_MPU32_TXD_PA16
RPi_GPIO15_MPU32_RXD_PA15
RPi_GPIO18_I²S_BCLK_PB26
RPi_GPIO23_PA21
RPi_GPIO24_PA22
RPi_GPIO10_SPI_MOSI_PC22
RPi_GPIO9_SPI_MISO_PC23
RPi_GPIO11_SPI_SCK_PC26
FLEXCOM3_IO0_SPI_MOSI
FLEXCOM3_IO1_SPI_MISO
FLEXCOM3_IO2_SPI_SCK
FLEXCOM3_IO3_SPI_NPCS0
RPi_GPIO8_SPI_NPCS0_PC25
RPi_GPIO13_PWM1_PC20
RPi_GPIO19_I²S_WS_PB15
RPi_GPIO20_I²S_DIN_PB16
RPi_GPIO21_I²S_DOUT_PB17
HDR-2.54 Male 2x20
PRPC020DAAN-RC