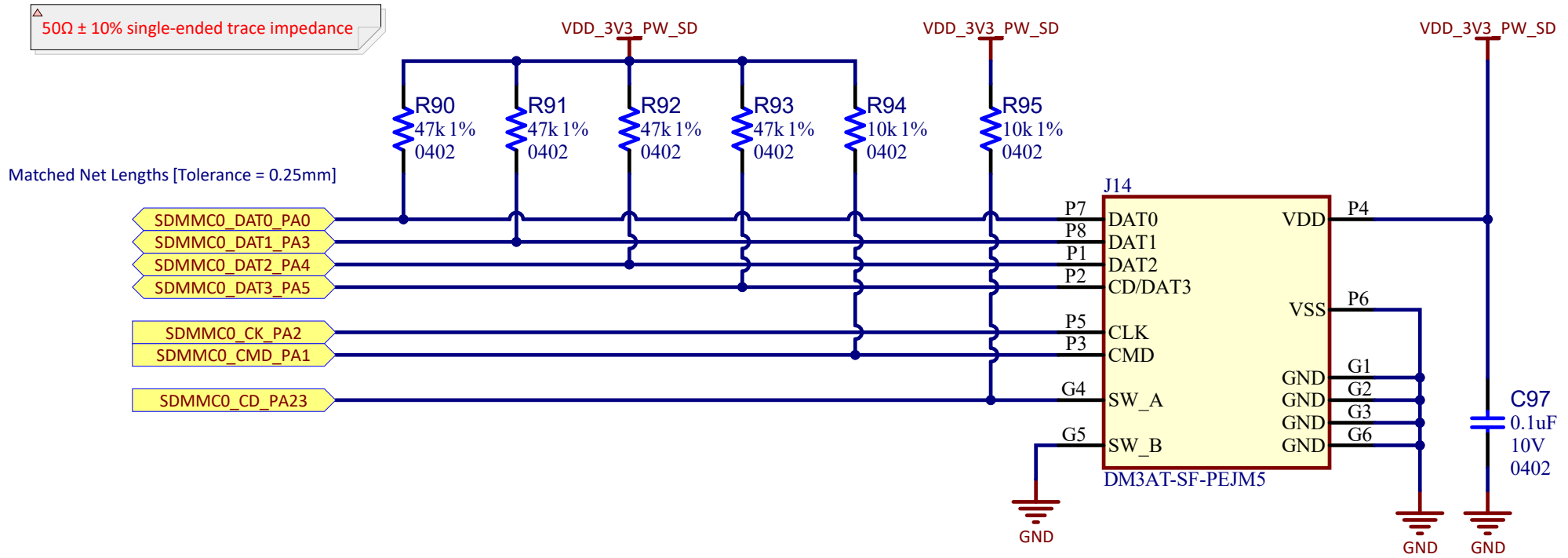
50Ω ± 10% single-ended trace impedance
VDD_3V3_PW_SD
VDD_3V3_PW_SD
VDD_3V3_PW_SD
R90
47k 1%
0402
R91
47k 1%
0402
R92
47k 1%
0402
R93
47k 1%
0402
R94
10k 1%
0402
R95
10k 1%
0402
Matched Net Lengths [Tolerance = 0.25mm]
SDMMC0_DAT0_PA0
SDMMC0_DAT1_PA3
SDMMC0_DAT2_PA4
SDMMC0_DAT3_PA5
SDMMC0_CK_PA2
SDMMC0_CMD_PA1
SDMMC0_CD_PA23
J14
P7
P8
P1
P2
P5
P3
G4
G5
DAT0
DAT1
DAT2
CD/DAT3
CLK
CMD
SW_A
SW_B
VDD
VSS
GND
GND
GND
GND
P4
P6
G1
G2
G3
G6
DM3AT-SF-PEJM5
C97
0.1uF
10V
0402
GND
GND
GND