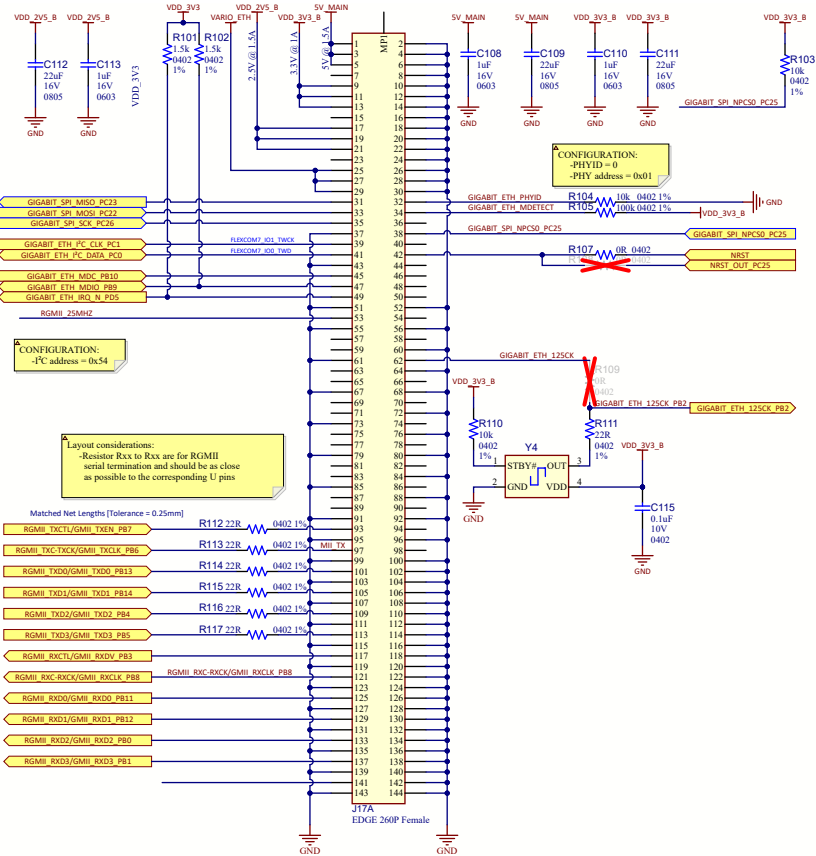
VDD_2V5_B
VDD_2V5_B
C112
22uF
16V
0805
C113
1uF
16V
0603
GND
GND
VDD_3V3
VDD_3V3
R101
1.5k
0402
1%
R102
1.5k
0402
1%
VARIO_ETH
VDD_2V5_B
2.5V @ 1.5A
VDD_3V3_B
3.3V @ 1A
5V_MAIN
5V @ 1.5A
MPI
5V_MAIN
C108
1uF
16V
0603
5V_MAIN
C109
22uF
16V
0805
VDD_3V3_B
C110
1uF
16V
0603
VDD_3V3_B
C111
22uF
16V
0805
VDD_3V3_B
R103
10k
0402
1%
GIGABIT_SPI_NPCS0_PC25
CONFIGURATION:
-PHYID = 0
-PHY address = 0x01
GIGABIT_SPI_MISO_PC23
GIGABIT_SPI_MOSI_PC22
GIGABIT_SPI_SCK_PC26
GIGABIT_ETH_PHYID
GIGABIT_ETH_MDETECT
R104
10k
0402
1%
R105
100k
0402
1%
GND
VDD_3V3_B
GIGABIT_SPI_NPCS0_PC25
GIGABIT_SPI_NPCS0_PC25
GIGABIT_ETH_I²C_CLK_PC1
GIGABIT_ETH_I²C_DATA_PC0
FLEXCOM7_IO1_TWCK
FLEXCOM7_IO0_TWD
R107
0R
0402
NRST
NRST_OUT_PC25
GIGABIT_ETH_MDC_PB10
GIGABIT_ETH_MDIO_PB9
GIGABIT_ETH_IRQ_N_PD5
RGMII_25MHZ
CONFIGURATION:
-I²C address = 0x54
GIGABIT_ETH_125CK
VDD_3V3_B
R109
0R
0402
GIGABIT_ETH_125CK_PB2
GIGABIT_ETH_125CK_PB2
R110
10k
0402
1%
R111
22R
0402
1%
VDD_3V3_B
Y4
STBY#
OUT
GND
VDD
GND
C115
0.1uF
10V
0402
GND
Layout considerations:
-Resistor Rxx to Rxx are for RGMII
serial termination and should be as close
as possible to the corresponding U pins
Matched Net Lengths [Tolerance = 0.25mm]
RGMII_TXCTL/GMII_TXEN_PB7
RGMII_TXC-TXCK/GMII_TXCLK_PB6
RGMII_TXD0/GMII_TXD0_PB13
RGMII_TXD1/GMII_TXD1_PB14
RGMII_TXD2/GMII_TXD2_PB4
RGMII_TXD3/GMII_TXD3_PB5
RGMII_RXCTL/GMII_RXDV_PB3
RGMII_RXC-RXCK/GMII_RXCLK_PB8
RGMII_RXD0/GMII_RXD0_PB11
RGMII_RXD1/GMII_RXD1_PB12
RGMII_RXD2/GMII_RXD2_PB0
RGMII_RXD3/GMII_RXD3_PB1
R112 22R 0402 1%
R113 22R 0402 1%
R114 22R 0402 1%
R115 22R 0402 1%
R116 22R 0402 1%
R117 22R 0402 1%
MII_TX
RGMII_RXC-RXCK/GMII_RXCLK_PB8
J17A
EDGE 260P Female
GND
GND

VDD_3V3
VARIO_ETH
R153
0R
0603