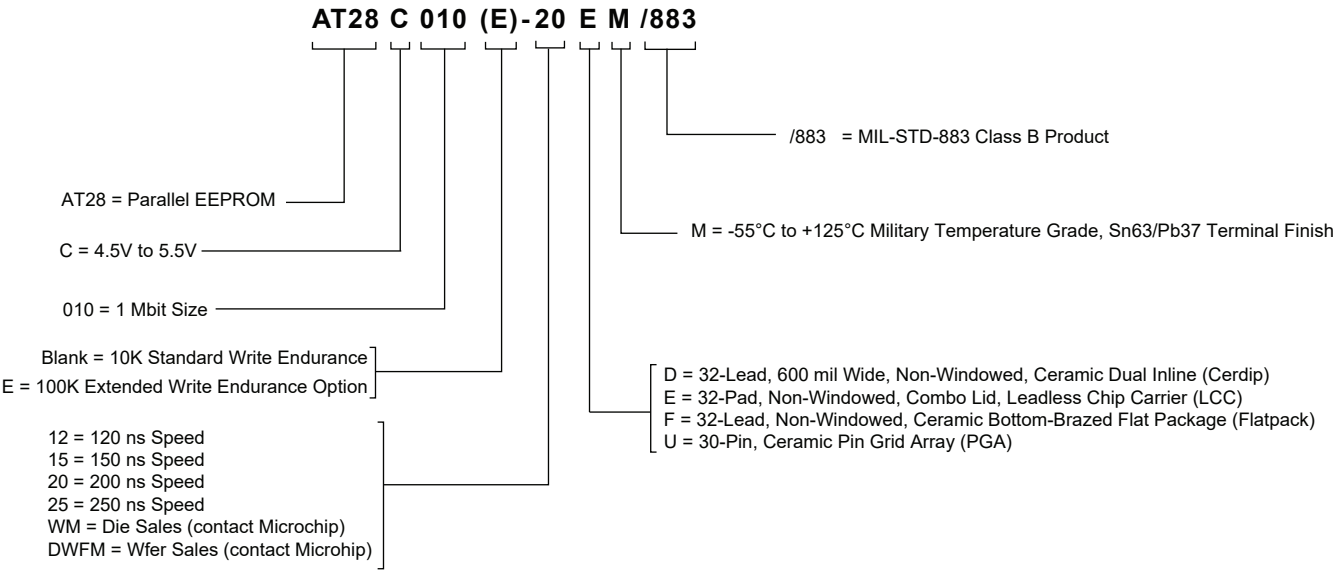
AT28 C 010 (E)-20 E M /883
/883 = MIL-STD-883 Class B Product
AT28 = Parallel EEPROM
M = -55°C to +125°C Military Temperature Grade, Sn63/Pb37 Terminal Finish
C = 4.5V to 5.5V
010 = 1 Mbit Size
Blank = 10K Standard Write Endurance
E = 100K Extended Write Endurance Option
D = 32-Lead, 600 mil Wide, Non-Windowed, Ceramic Dual Inline (Cerdip)
E = 32-Pad, Non-Windowed, Combo Lid, Leadless Chip Carrier (LCC)
F = 32-Lead, Non-Windowed, Ceramic Bottom-Brazed Flat Package (Flatpack)
U = 30-Pin, Ceramic Pin Grid Array (PGA)
12 = 120 ns Speed
15 = 150 ns Speed
20 = 200 ns Speed
25 = 250 ns Speed
WM = Die Sales (contact Microchip)
DWFM = Wfer Sales (contact Microhip)