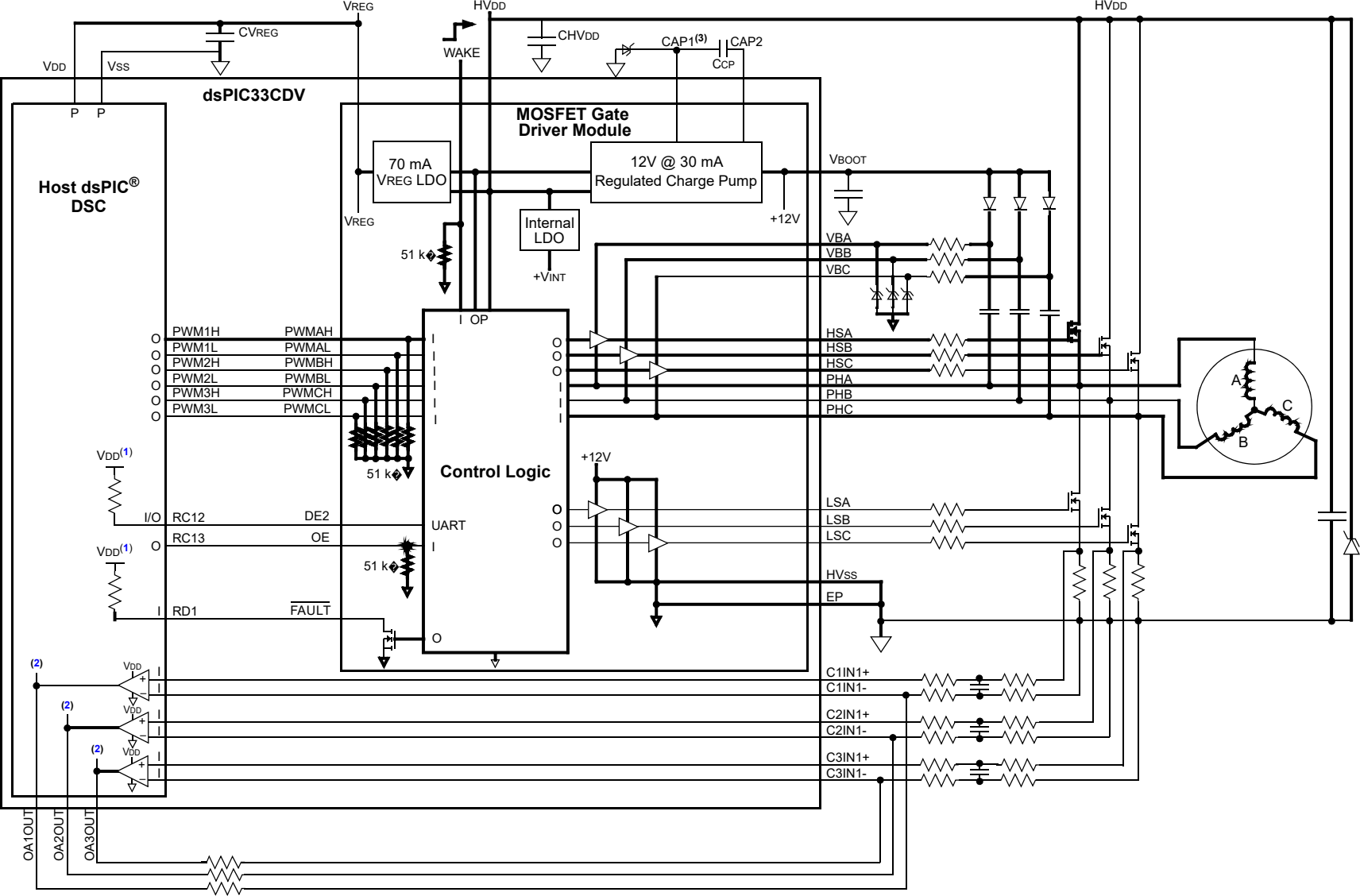
VREG
HVDD
HVDD
CVREG
CHVDD
CAP1(3)
CAP2
CCP
WAKE
VDD
VSS
dsPIC33CDV
P
P
MOSFET Gate
Driver Module
70 mA
VREG LDO
12V @ 30 mA
Regulated Charge Pump
VBOOT
Host dsPIC®
DSC
VREG
Internal
LDO
+12V
+VINT
51 k
VBA
VBB
VBC
I OP
PWM1H PWMAH
PWM1L PWMAL
PWM2H PWMBH
PWM2L PWMBL
PWM3H PWMCH
PWM3L PWMCL
HSA
HSB
HSC
PHA
PHB
PHC
A
B
C
VDD(1)
51 k
Control Logic
+12V
I/O RC12 DE2
RC13 OE
UART
LSA
LSB
LSC
VDD(1)
51 k
HVSS
EP
RD1 FAULT
(2)
VDD
C1IN1+
C1IN1-
C2IN1+
C2IN1-
C3IN1+
C3IN1-
OA1OUT
OA2OUT
OA3OUT