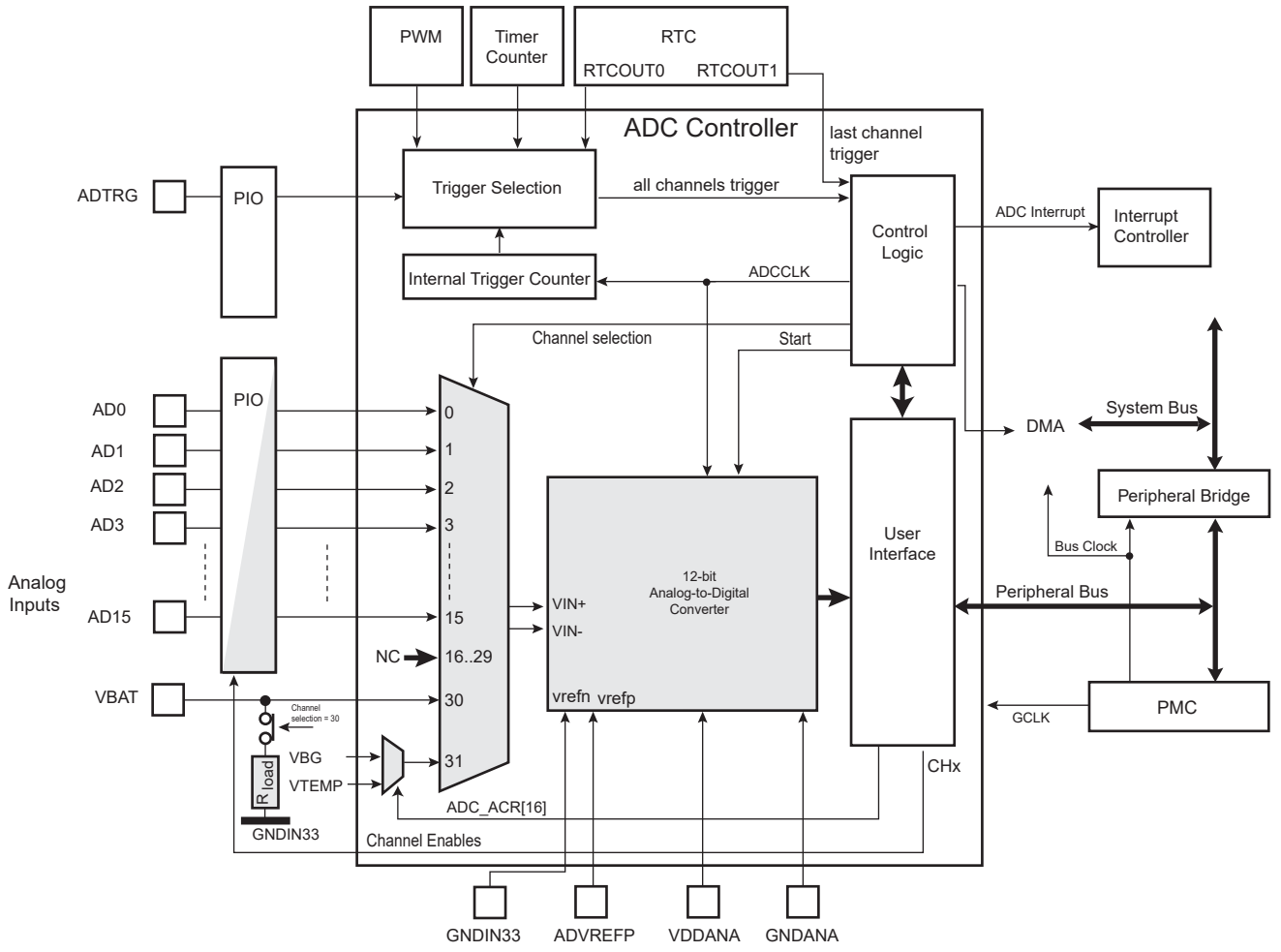
PWM
Timer Counter
RTC
RTCOUT0
RTCOUT1
ADC Controller
last channel trigger
ADTRG
PIO
Trigger Selection
all channels trigger
Control Logic
ADC Interrupt
Interrupt Controller
Internal Trigger Counter
ADCCLK
Channel selection
Start
AD0
AD1
AD2
AD3
AD15
Analog Inputs
PIO
0
1
2
3
15
16..29
30
31
NC
VBAT
Channel selection = 30
VBG
VTEMP
R load
GNDIN33
ADC_ACR[16]
Channel Enables
VIN+
VIN-
12-bit Analog-to-Digital Converter
vrefn
vrefp
User Interface
DMA
System Bus
Peripheral Bridge
Bus Clock
Peripheral Bus
PMC
GCLK
CHx
GNDIN33
ADVREFP
VDDANA
GNDANA