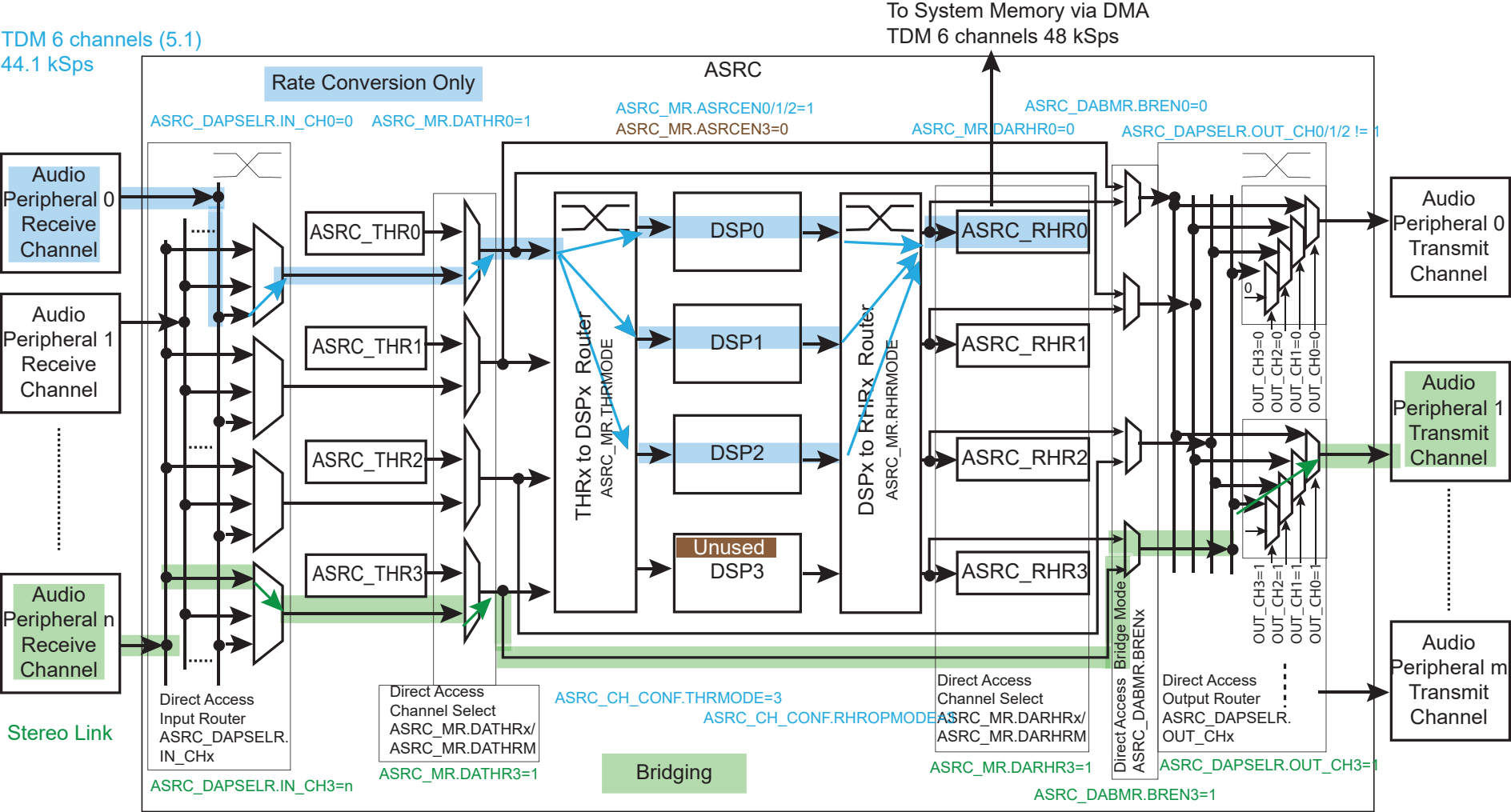
TDM 6 channels (5.1)
44.1 kSps
To System Memory via DMA
TDM 6 channels 48 kSps
ASRC
Rate Conversion Only
ASRC_DAPSELR.IN_CH0=0
ASRC_MR.DATHR0=1
ASRC_MR.ASRCEN0/1/2=1
ASRC_MR.ASRCEN3=0
ASRC_DABMR.BREN0=0
ASRC_MR.DARHR0=0
ASRC_DAPSELR.OUT_CH0/1/2 != 1
Audio Peripheral 0 Receive Channel
Audio Peripheral 1 Receive Channel
Audio Peripheral n Receive Channel
Stereo Link
ASRC_THR0
ASRC_THR1
ASRC_THR2
ASRC_THR3
THRx to DSPx Router
ASRC_MR.THRMODE
DSP0
DSP1
DSP2
Unused
DSP3
DSPx to RHRx Router
ASRC_MR.RHRMODE
ASRC_RHR0
ASRC_RHR1
ASRC_RHR2
ASRC_RHR3
Bridge Mode
Direct Access
ASRC_DABMR.BRENx
OUT_CH3=0
OUT_CH2=0
OUT_CH1=0
OUT_CH0=0
OUT_CH3=1
OUT_CH2=1
OUT_CH1=1
OUT_CH0=1
Audio Peripheral 0 Transmit Channel
Audio Peripheral 1 Transmit Channel
Audio Peripheral m Transmit Channel
Direct Access
Input Router
ASRC_DAPSELR.
IN_CHx
ASRC_DAPSELR.IN_CH3=n
Direct Access
Channel Select
ASRC_MR.DATHRx/
ASRC_MR.DATHRM
ASRC_MR.DATHR3=1
ASRC_CH_CONF.THRMODE=3
ASRC_CH_CONF.RHROPMODE
Bridging
Direct Access
Channel Select
ASRC_MR.DARHRx/
ASRC_MR.DARHRM
ASRC_MR.DARHR3=1
ASRC_DABMR.BREN3=1
Direct Access
Output Router
ASRC_DAPSELR.
OUT_CHx
ASRC_DAPSELR.OUT_CH3=1