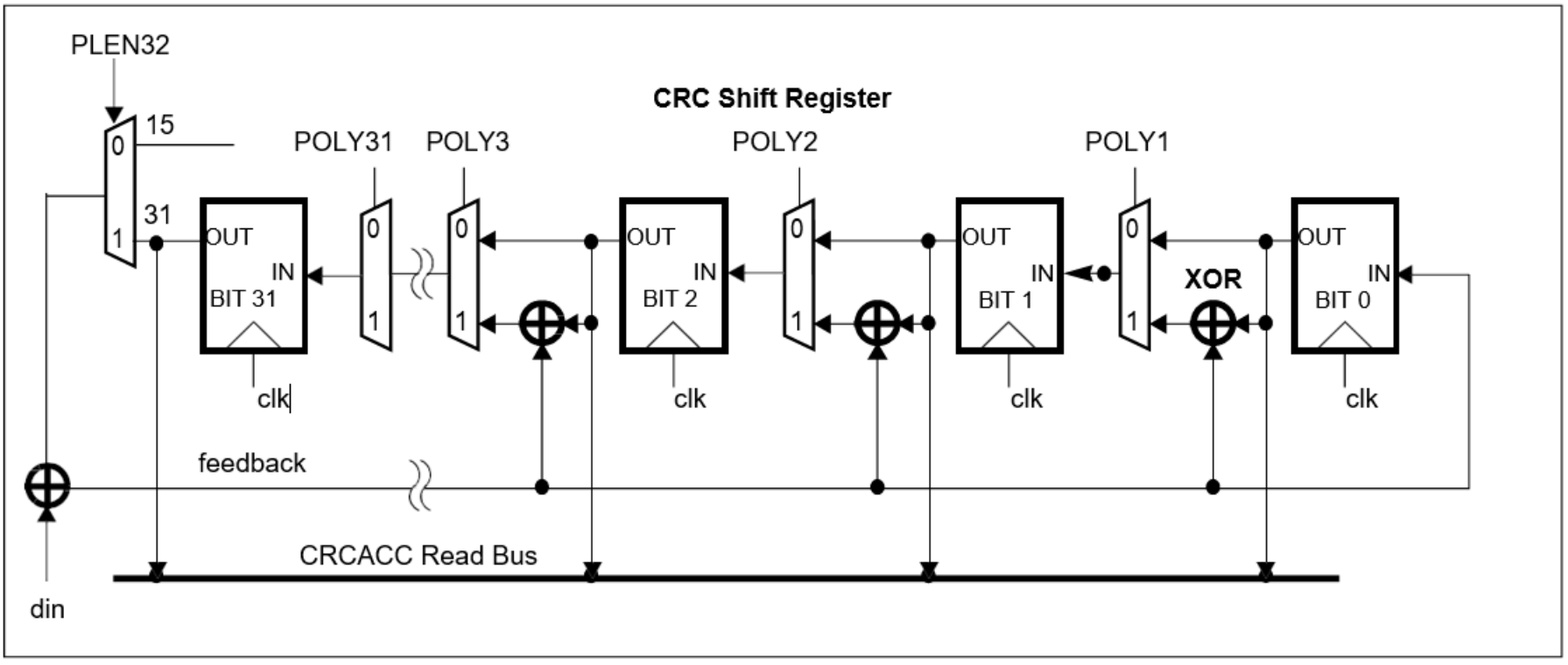
CRC Shift Register
PLEN32
15
31
POLY31
POLY3
POLY2
POLY1
OUT
IN
BIT 31
BIT 2
BIT 1
BIT 0
XOR
clk
feedback
CRCACC Read Bus
din